2022 PRICELIST

aloredesign.com
streamlinecanada.ca

laTorre®

SERIES	FINISHES	PAGE
PROFILI PLUS NEW	PC-BN	6
PROFILI	PC-BN-BL-WH	12
LAGHI	PC-BN-BL-WH-PG-BC-NC	20
TAYA	PC-BN-BL-WH	26
WODA	PC-BN	28
ITALIA 150	PC-BN	30
STUDIO	PC-BN-NM-BM	32
OVALINE	PC	34
KONVEX	PC-BN-PG	38
NEWTECH	PC-BN-BL-WH	42
CROSSTECH NEW	PC-BN-BL-WH	48
METRÒ	PC	50
NEWPRO	PC	52
VICTORIA	PC-BN-PG	55
VICTORIA III	PC-BN-PG	58
THERMOSTATIC MIXER		62
SHOWER HEAD		63
KITCHEN	PC-BN-GR	64
CERTIFICATION		4

ALL products in this price list are CSA approved

FINISHES

PC
Chrome
Chromè

BL
Matte black
Noir complet

WH
Matte white
Blanc complet

BN
Brushed Nickel
Acier brossé

PG
Glossy gold
Dorè brillant

NC
Black Chrome
Bicouleur noir

BC
White Chrome
Bicouleur blanc

NM
Black with chrome parts
Noir avec detailles chrome

BM
White with chrome parts
Banc avec detailles chrome

GRANITE FINISHES

Polar granite

Graphite granite

Beige granite

cappuccino granite

Oyster granite

Stone granite

FLOW RATE AT 44psi

1,2GPM	• Lavatory mixer • Tall lavatory mixer • Widespread lavatory faucet • Wall mounted lavatory faucet • Side lever lavatory faucet • Freestading lavatory faucet
1,8GPM	• Showerhead • Handshower
1,8GPM	• Sink mixer
2,6GPM	• Wall mounted tub spout
3,6GPM	• Freestading bathtub mixer
4,0GPM	• Ovaline bathtub deck mounted • Preassure balance mixer
6,0GPM	• Built-in mixer valve
7,0GPM	• Thermostatic mixer
10,0GPM	• Profili bathtub deck mounted
19,5GPM	• Victoria bathtub mixer • VictoriaII bathtub mixer

TECHNICAL FEATURES

- Cartridge D25 with ceramic discs
- Cartridge D35 with ceramic discs
- 90° Brass headwork with ceramic discs
- Cartridge D40 with ceramic discs and pressure balance function
- Thermostatic cartridge with anti-scald function
- Connection hose in stainless steel
- All mixers made in brass

NOTE!
This check mark symbol indicates IN STOCK items, and which finishes are in stock.

OUR CERTIFICATIONS

ENG

Many International approvals and certifications obtained through the years are proof of the application of our values and principles in our work:

FR

Nos certifications à testifier notre engagement vers qualité et écologie, plusieurs sont les certifications qui Tech Rain a obtenu pendant les ans, y compris:

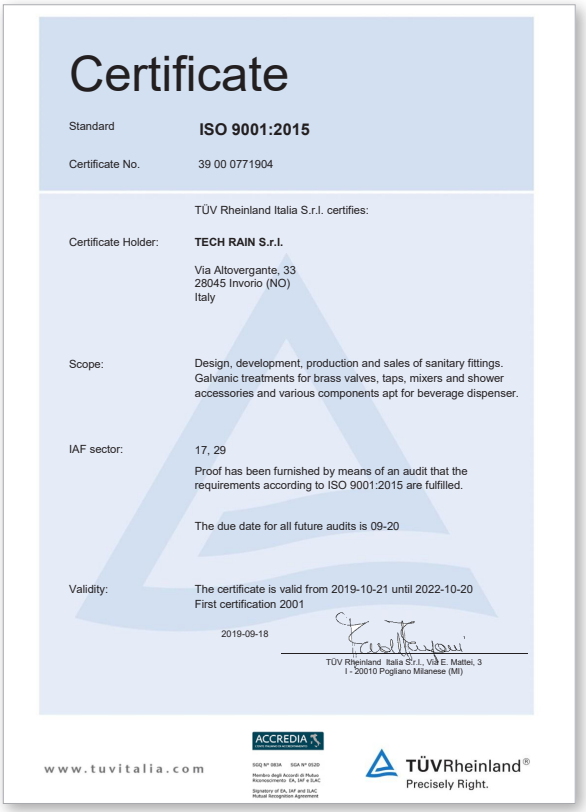

Certificate

Standard **ISO 9001:2015**

Certificate No. 39 00 0771904

TÜV Rheinland Italia S.r.l. certifies:

Certificate Holder: **TECH RAIN S.r.l.**

Via Altovergante, 33
28045 Invorio (NO)
Italy

Scope: Design, development, production and sales of sanitary fittings. Galvanic treatments for brass valves, taps, mixers and shower accessories and various components apt for beverage dispenser.

IAF sector: 17, 29

Proof has been furnished by means of an audit that the requirements according to ISO 9001:2015 are fulfilled.

The due date for all future audits is 09-20

Validity: The certificate is valid from 2019-10-21 until 2022-10-20
First certification 2001

2019-09-18

TÜV Rheinland Italia S.r.l., Via E. Mattei, 3
I - 20010 Pogliano Milanese (MI)

www.tuvitalia.com

ACCREDIA

TÜVRheinland®
Precisely Right.

ISO 9001:2015

Production cycle certified as 80% in-house and only 20% outsourced locally.
First quality material.
Certified and health safe components.

Cycle de production de 80% dans notre usine, 20% externalisée localement.
Matériel de première qualité.
Composants et revêtements certifiés.

Certificate

Standard **ISO 14001:2015**

Certificate Registr. No. **01 104 1917529**

Certificate Holder: **TECH RAIN SRL**
Via Altovergante 33
28045 Invorio NO
Italy

Scope: Design, development, production and sales of sanitary fittings. Galvanic treatments for brass valves, taps, mixers and shower accessories and various components apt for beverage dispensers.

Proof has been furnished by means of an audit that the requirements of ISO 14001:2015 are met.

Validity: The certificate is valid from 2019-10-08 until 2022-10-07.
First certification 2019

2019-10-08

TÜV Rheinland Cert GmbH
Am Grauen Stein · 51105 Köln

www.tuv.com

IAF

DAkkS Deutsche Akkreditierungsstelle D-ZM-16031-01-00

TÜVRheinland®
Precisely Right.

ISO 14001: 2015

GREEN APPROACH
since 2001 from T.Ü.V. for certificate recognition
of policy and production process ECO-FRIENDLY.

APPROCHE VERT
détenue en 2001 par T.Ü.V. pour certifier
les processus, les attitudes
et la politique écologiques.

CSA CERTIFACATE

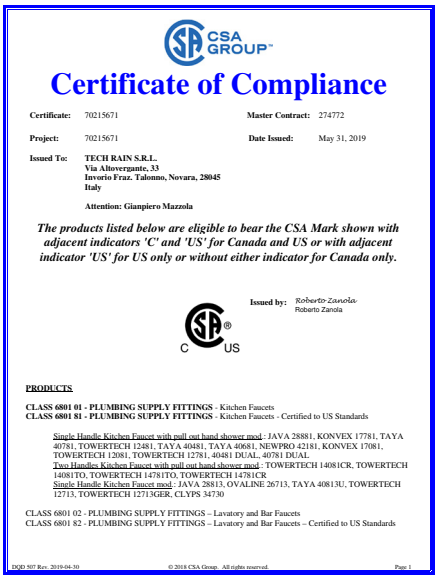

CSA GROUP

Certificate of Compliance

Certificate: 70215671 **Master Contract:** 274772

Project: 70215671 **Date Issued:** May 31, 2019

Issued To: **TECH RAIN S.R.L.**
Via Altovergante, 33
Inverio Fraz. Talonno, Novara, 28045
Italy

Attention: Gianpiero Mazzola

The products listed below are eligible to bear the CSA Mark shown with adjacent indicators 'C' and 'US' for Canada and US or with adjacent indicator 'US' for US only or without either indicator for Canada only.

Issued by: Roberto Zanola
Roberto Zanola

C US

PRODUCTS

CLASS 6801 01 - PLUMBING SUPPLY FITTINGS - Kitchen Faucets
CLASS 6801 81 - PLUMBING SUPPLY FITTINGS - Kitchen Faucets - Certified to US Standards

Single Handle Kitchen Faucet with pull out hand shower mod.: JAVA 28881, KONVEX 17781, TAYA 40781, TOWERTECH 12481, TAYA 40481, TAYA 40681, NEWPRO 42181, KONVEX 17081, TOWERTECH 12081, TOWERTECH 12781, 40481 DUAL, 40781 DUAL
Two Handles Kitchen Faucet with pull out hand shower mod.: TOWERTECH 14081CR, TOWERTECH 14081TO, TOWERTECH 14781TO, TOWERTECH 14781CR
Single Handle Kitchen Faucet mod.: JAVA 28813, OVALINE 26713, TAYA 40813U, TOWERTECH 12713, TOWERTECH 12713GER, CLYPS 34730

CLASS 6801 02 - PLUMBING SUPPLY FITTINGS – Lavatory and Bar Faucets
CLASS 6801 82 - PLUMBING SUPPLY FITTINGS – Lavatory and Bar Faucets – Certified to US Standards

DOD 507 Rev. 2019-04-30 © 2018 CSA Group. All rights reserved. Page 1

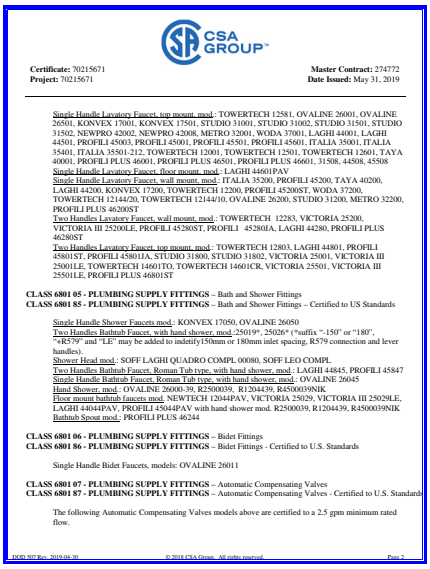

CSA GROUP

Certificate: 70215671 **Master Contract:** 274772
Project: 70215671 **Date Issued:** May 31, 2019

Single Handle Lavatory Faucet, top mount, mod.: TOWERTECH 12581, OVALINE 26001, OVALINE 26501, KONVEX 17001, KONVEX 17501, STUDIO 31001, STUDIO 31002, STUDIO 31501, STUDIO 31502, NEWPRO 42002, NEWPRO 42008, METRO 32001, WODA 37001, LAGHI 44001, LAGHI 44501, PROFILI 45003, PROFILI 45001, PROFILI 45501, PROFILI 45601, ITALIA 35001, ITALIA 35401, ITALIA 35501-212, TOWERTECH 12001, TOWERTECH 12501, TOWERTECH 12601, TAYA 40001, PROFILI PLUS 46001, PROFILI PLUS 46501, PROFILI PLUS 46601, 31508, 44508, 45508
Single Handle Lavatory Faucet, floor mount, mod.: LAGHI 44601PAV
Single Handle Lavatory Faucet, wall mount, mod.: ITALIA 35200, PROFILI 45200, TAYA 40200, LAGHI 44200, KONVEX 17200, TOWERTECH 12200, PROFILI 45200ST, WODA 37200, TOWERTECH 12144/20, TOWERTECH 12144/10, OVALINE 26200, STUDIO 31200, METRO 32200, PROFILI PLUS 46200ST
Two Handles Lavatory Faucet, wall mount, mod.: TOWERTECH 12283, VICTORIA 25200, VICTORIA III 25200LE, PROFILI 45280ST, PROFILI 45280IA, LAGHI 44280, PROFILI PLUS 46280ST
Two Handles Lavatory Faucet, top mount, mod.: TOWERTECH 12803, LAGHI 44801, PROFILI 45801ST, PROFILI 45801IA, STUDIO 31800, STUDIO 31802, VICTORIA 25001, VICTORIA III 25001LE, TOWERTECH 14601TO, TOWERTECH 14601CR, VICTORIA 25501, VICTORIA III 25501LE, PROFILI PLUS 46801ST

CLASS 6801 05 - PLUMBING SUPPLY FITTINGS – Bath and Shower Fittings
CLASS 6801 85 - PLUMBING SUPPLY FITTINGS – Bath and Shower Fittings – Certified to US Standards

Single Handle Shower Faucets mod.: KONVEX 17050, OVALINE 26050
Two Handles Bathtub Faucet, with hand shower, mod.:25019*, 25026* (*suffix "-150" or "180", "+R579" and "LE" may be added to indetify 150mm or 180mm inlet spacing, R579 connection and lever handles).
Shower Head mod.: SOFF LAGHI QUADRO COMPL 00080, SOFF LEO COMPL
Two Handles Bathtub Faucet, Roman Tub type, with hand shower, mod.: LAGHI 44845, PROFILI 45847
Single Handle Bathtub Faucet, Roman Tub type, with hand shower, mod.: OVALINE 26045
Hand Shower, mod.: OVALINE 26000-39, R2500039, R1204439, R4500039NIK
Floor mount bathtub faucets mod. NEWTECH 12044PAV, VICTORIA 25029, VICTORIA III 25029LE, LAGHI 44044PAV, PROFILI 45044PAV with hand shower mod. R2500039, R1204439, R4500039NIK
Bathtub Spout mod.: PROFILI PLUS 46244

CLASS 6801 06 - PLUMBING SUPPLY FITTINGS – Bidet Fittings
CLASS 6801 86 - PLUMBING SUPPLY FITTINGS – Bidet Fittings - Certified to U.S. Standards

Single Handle Bidet Faucets, models: OVALINE 26011

CLASS 6801 07 - PLUMBING SUPPLY FITTINGS – Automatic Compensating Valves
CLASS 6801 87 - PLUMBING SUPPLY FITTINGS – Automatic Compensating Valves - Certified to U.S. Standards

The following Automatic Compensating Valves models above are certified to a 2.5 gpm minimum rated flow.

DOD 507 Rev. 2019-04-30 © 2018 CSA Group. All rights reserved. Page 2

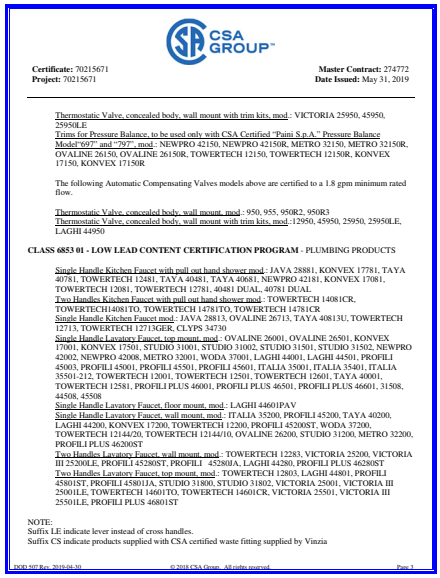

CSA GROUP

Certificate: 70215671 **Master Contract:** 274772
Project: 70215671 **Date Issued:** May 31, 2019

Thermostatic Valve, concealed body, wall mount with trim kits, mod.: VICTORIA 25950, 45950, 25950LE
Trims for Pressure Balance, to be used only with CSA Certified "Paini S.p.A." Pressure Balance Model"697" and "797", mod.: NEWPRO 42150, NEWPRO 42150R, METRO 32150, METRO 32150R, OVALINE 26150, OVALINE 26150R, TOWERTECH 12150, TOWERTECH 12150R, KONVEX 17150, KONVEX 17150R

The following Automatic Compensating Valves models above are certified to a 1.8 gpm minimum rated flow.

Thermostatic Valve, concealed body, wall mount, mod.: 950, 955, 950R2, 950R3
Thermostatic Valve, concealed body, wall mount with trim kits, mod.:12950, 45950, 25950, 25950LE, LAGHI 44950

CLASS 6853 01 - LOW LEAD CONTENT CERTIFICATION PROGRAM - PLUMBING PRODUCTS

Single Handle Kitchen Faucet with pull out hand shower mod.: JAVA 28881, KONVEX 17781, TAYA 40781, TOWERTECH 12481, TAYA 40481, TAYA 40681, NEWPRO 42181, KONVEX 17081, TOWERTECH 12081, TOWERTECH 12781, 40481 DUAL, 40781 DUAL
Two Handles Kitchen Faucet with pull out hand shower mod.: TOWERTECH 14081CR, TOWERTECH14081TO, TOWERTECH 14781TO, TOWERTECH 14781CR
Single Handle Kitchen Faucet mod.: JAVA 28813, OVALINE 26713, TAYA 40813U, TOWERTECH 12713, TOWERTECH 12713GER, CLYPS 34730
Single Handle Lavatory Faucet, top mount, mod.: OVALINE 26001, OVALINE 26501, KONVEX 17001, KONVEX 17501, STUDIO 31001, STUDIO 31002, STUDIO 31501, STUDIO 31502, NEWPRO 42002, NEWPRO 42008, METRO 32001, WODA 37001, LAGHI 44001, LAGHI 44501, PROFILI 45003, PROFILI 45001, PROFILI 45501, PROFILI 45601, ITALIA 35001, ITALIA 35401, ITALIA 35501-212, TOWERTECH 12001, TOWERTECH 12501, TOWERTECH 12601, TAYA 40001, TOWERTECH 12581, PROFILI PLUS 46001, PROFILI PLUS 46501, PROFILI PLUS 46601, 31508, 44508, 45508
Single Handle Lavatory Faucet, floor mount, mod.: LAGHI 44601PAV
Single Handle Lavatory Faucet, wall mount, mod.: ITALIA 35200, PROFILI 45200, TAYA 40200, LAGHI 44200, KONVEX 17200, TOWERTECH 12200, PROFILI 45200ST, WODA 37200, TOWERTECH 12144/20, TOWERTECH 12144/10, OVALINE 26200, STUDIO 31200, METRO 32200, PROFILI PLUS 46200ST
Two Handles Lavatory Faucet, wall mount, mod.: TOWERTECH 12283, VICTORIA 25200, VICTORIA III 25200LE, PROFILI 45280ST, PROFILI 45280IA, LAGHI 44280, PROFILI PLUS 46280ST
Two Handles Lavatory Faucet, top mount, mod.: TOWERTECH 12803, LAGHI 44801, PROFILI 45801ST, PROFILI 45801IA, STUDIO 31800, STUDIO 31802, VICTORIA 25001, VICTORIA III 25001LE, TOWERTECH 14601TO, TOWERTECH 14601CR, VICTORIA 25501, VICTORIA III 25501LE, PROFILI PLUS 46801ST

NOTE:
Suffix LE indicate lever instead of cross handles.
Suffix CS indicate products supplied with CSA certified waste fitting supplied by Vinzia

DOD 507 Rev. 2019-04-30 © 2018 CSA Group. All rights reserved. Page 3

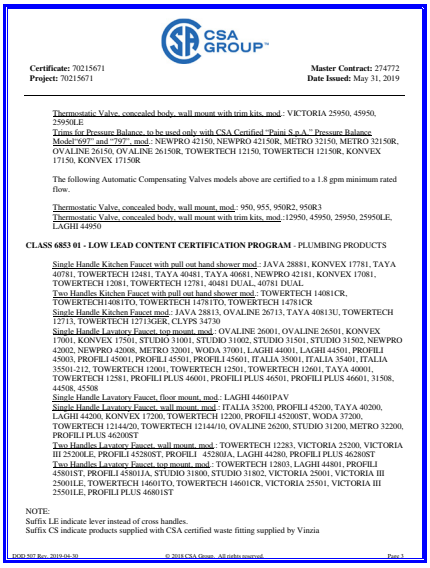

CSA GROUP

Certificate: 70215671 **Master Contract:** 274772
Project: 70215671 **Date Issued:** May 31, 2019

Thermostatic Valve, concealed body, wall mount with trim kits, mod.: VICTORIA 25950, 45950, 25950LE
Trims for Pressure Balance, to be used only with CSA Certified "Paini S.p.A." Pressure Balance Model"697" and "797", mod.: NEWPRO 42150, NEWPRO 42150R, METRO 32150, METRO 32150R, OVALINE 26150, OVALINE 26150R, TOWERTECH 12150, TOWERTECH 12150R, KONVEX 17150, KONVEX 17150R

The following Automatic Compensating Valves models above are certified to a 1.8 gpm minimum rated flow.

Thermostatic Valve, concealed body, wall mount, mod.: 950, 955, 950R2, 950R3
Thermostatic Valve, concealed body, wall mount with trim kits, mod.:12950, 45950, 25950, 25950LE, LAGHI 44950

CLASS 6853 01 - LOW LEAD CONTENT CERTIFICATION PROGRAM - PLUMBING PRODUCTS

Single Handle Kitchen Faucet with pull out hand shower mod.: JAVA 28881, KONVEX 17781, TAYA 40781, TOWERTECH 12481, TAYA 40481, TAYA 40681, NEWPRO 42181, KONVEX 17081, TOWERTECH 12081, TOWERTECH 12781, 40481 DUAL, 40781 DUAL
Two Handles Kitchen Faucet with pull out hand shower mod.: TOWERTECH 14081CR, TOWERTECH14081TO, TOWERTECH 14781TO, TOWERTECH 14781CR
Single Handle Kitchen Faucet mod.: JAVA 28813, OVALINE 26713, TAYA 40813U, TOWERTECH 12713, TOWERTECH 12713GER, CLYPS 34730
Single Handle Lavatory Faucet, top mount, mod.: OVALINE 26001, OVALINE 26501, KONVEX 17001, KONVEX 17501, STUDIO 31001, STUDIO 31002, STUDIO 31501, STUDIO 31502, NEWPRO 42002, NEWPRO 42008, METRO 32001, WODA 37001, LAGHI 44001, LAGHI 44501, PROFILI 45003, PROFILI 45001, PROFILI 45501, PROFILI 45601, ITALIA 35001, ITALIA 35401, ITALIA 35501-212, TOWERTECH 12001, TOWERTECH 12501, TOWERTECH 12601, TAYA 40001, TOWERTECH 12581, PROFILI PLUS 46001, PROFILI PLUS 46501, PROFILI PLUS 46601, 31508, 44508, 45508
Single Handle Lavatory Faucet, floor mount, mod.: LAGHI 44601PAV
Single Handle Lavatory Faucet, wall mount, mod.: ITALIA 35200, PROFILI 45200, TAYA 40200, LAGHI 44200, KONVEX 17200, TOWERTECH 12200, PROFILI 45200ST, WODA 37200, TOWERTECH 12144/20, TOWERTECH 12144/10, OVALINE 26200, STUDIO 31200, METRO 32200, PROFILI PLUS 46200ST
Two Handles Lavatory Faucet, wall mount, mod.: TOWERTECH 12283, VICTORIA 25200, VICTORIA III 25200LE, PROFILI 45280ST, PROFILI 45280IA, LAGHI 44280, PROFILI PLUS 46280ST
Two Handles Lavatory Faucet, top mount, mod.: TOWERTECH 12803, LAGHI 44801, PROFILI 45801ST, PROFILI 45801IA, STUDIO 31800, STUDIO 31802, VICTORIA 25001, VICTORIA III 25001LE, TOWERTECH 14601TO, TOWERTECH 14601CR, VICTORIA 25501, VICTORIA III 25501LE, PROFILI PLUS 46801ST

NOTE:
Suffix LE indicate lever instead of cross handles.
Suffix CS indicate products supplied with CSA certified waste fitting supplied by Vinzia

DOD 507 Rev. 2019-04-30 © 2018 CSA Group. All rights reserved. Page 3

INTERNATIONAL APPROVALS

Tech rain is a dynamic reality active in the 5 continents in various ways and with several specific approvals.

Tech rain est donc une entreprise dynamique qui vend sur les 5 continents avec des canaux de distribution diversifiés avec le support de certifications internationales.

CSA Group · WaterMark · Australian Certification Services · 水務署 Water Supplies Department · SABS · JAS-ANZ · PRODUKTSERTIFIKAT PS 3128 SINTEF Certification · PUB Water for All: Conserve, Value, Enjoy · MEMBER OF MULTILATERAL RECOGNITION ARRANGEMENT IAF · ใบอนุญาต · ETA DANMARK · PRODUKTSERTIFIKAT PS 3129 SINTEF Certification

AWARDS

belarus design award · IDC & RAIC Present IIDEXCanada Canada's National Design + Architecture Exposition & Conference

PROFILI PLUS

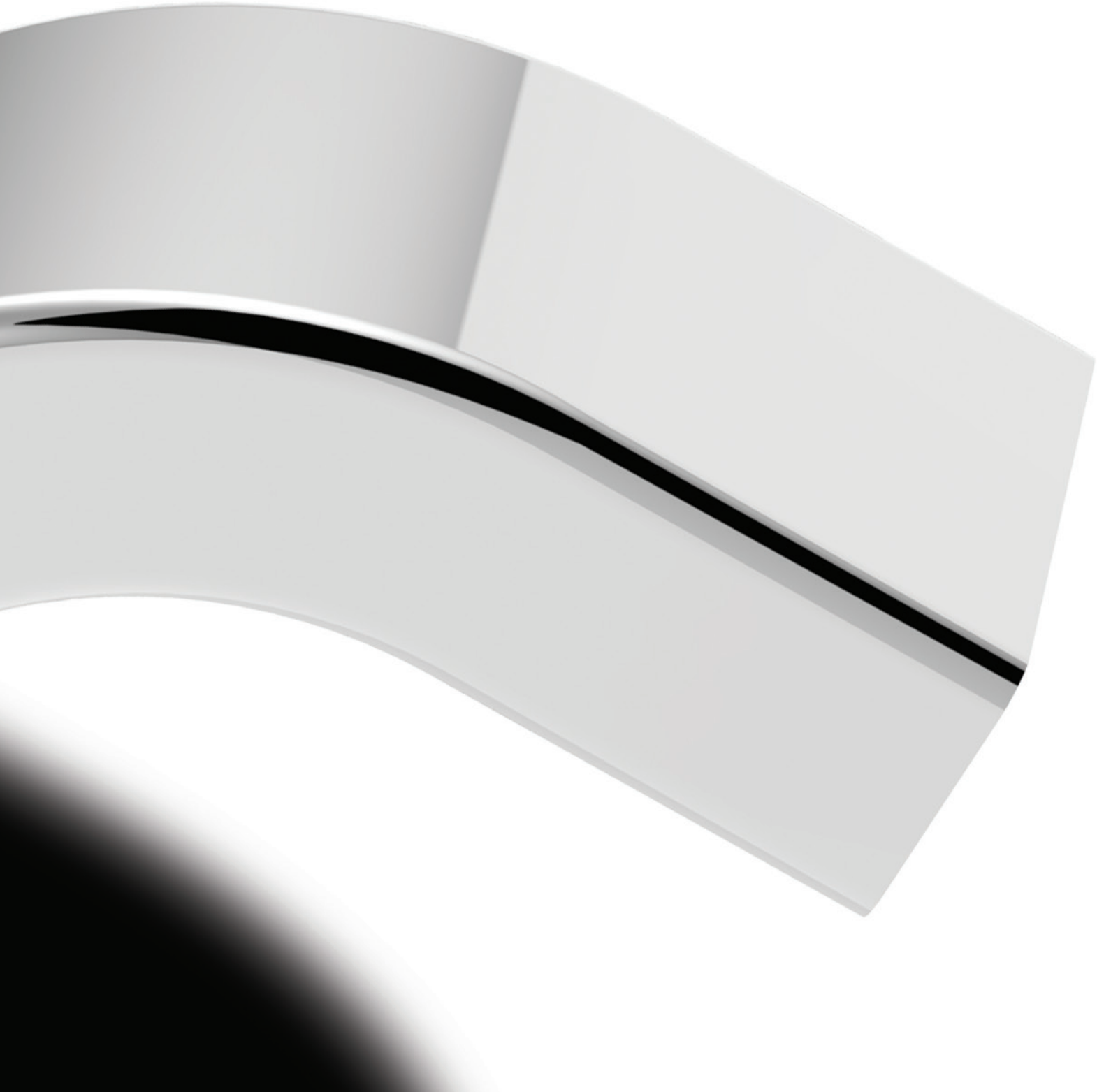

46001 CS

LAVATORY FAUCET WITH POP-UP WASTE WITH AERATOR
LAVABO AVEC VIDAGE, AVEC AERATEUR

PC $635
BN $890

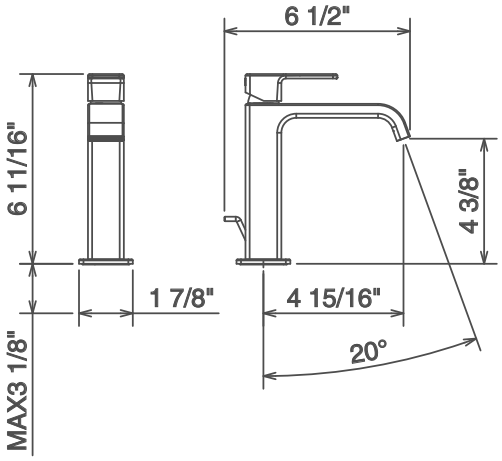

46001 TC

LAVATORY FAUCET WITHOUT POP-UP WASTE WITH AERATOR
LAVABO SANS VIDAGE AVEC AERATEUR

PC $585
BN $820

46501 TC

TALL LAVATORY FAUCET WITHOUT POP-UP WASTE WITH AERATOR
LAVABO HAUT SANS VIDAGE AVEC AERATEUR

PC $865
BN $1215

ONE PIECE BODY
CORPS ENTIER

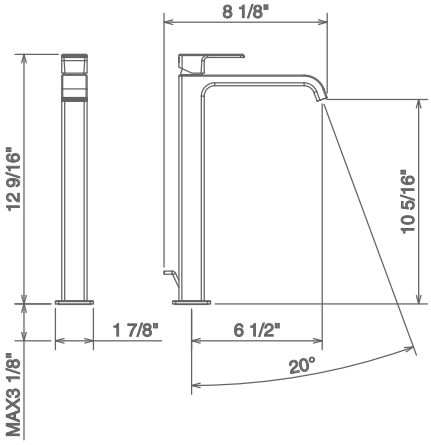

46601 CS

LAVATORY FAUCET WITH POP-UP WASTE WITH AERATOR
LAVABO AVEC VIDAGE, AVEC AERATEUR

SWIVEL SPOUT
BEC PIVOTANT

SPOUT IN BRASS BAR
BEC EN BARRE LAITON

PC $925
BN $1295

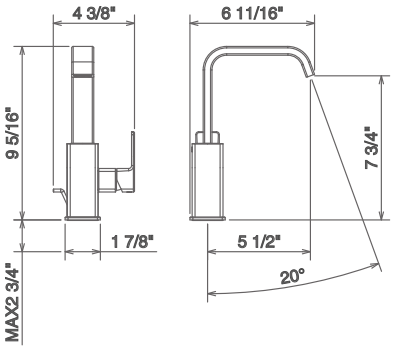

46200 ST TC

WALL MOUNTED LAVATORY SET WITHOUT POP-UP WASTE
MITIGEUR LAVABO À PAROIE SANS VIDAGE

SPOUT IN BRASS BAR
BEC EN BARRE LAITON

PC $850
BN $1190

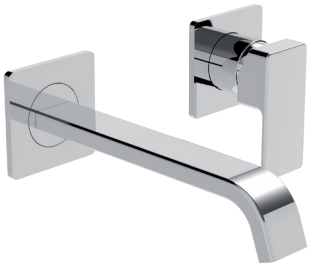

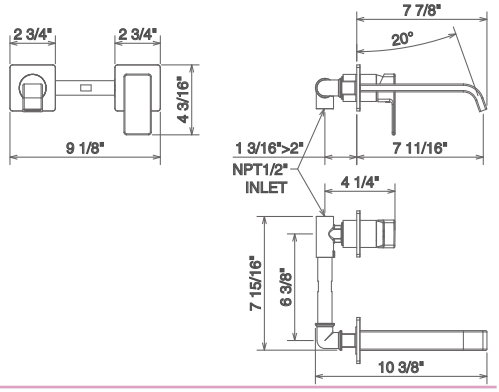

INDICATES IN STOCK

46801 ST CS

WIDESPREAD LAVATORY SET WITH POP-UP WASTE
MALANGEUR LAVABO 3 TROUS AVEC VIDAGE

SPOUT IN BRASS BAR
BEC EN BARRE LAITON

PC **$1390**

BN **$1945**

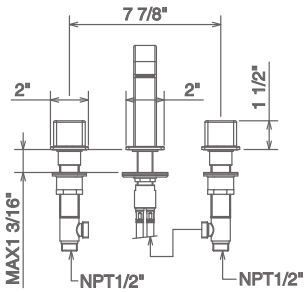

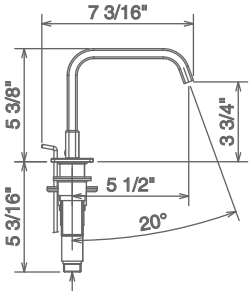

46280 ST TC

WALL MOUNTED LAVATORY SET WITHOUT POP-UP WASTE
MITIGEUR LAVABO À PAROIE SANS VIDAGE

SPOUT IN BRASS BAR
BEC EN BARRE LAITON

PC **$1155**

BN **$1615**

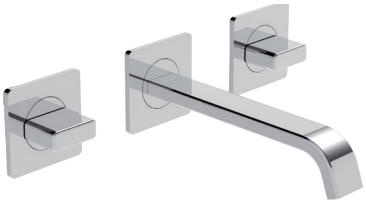

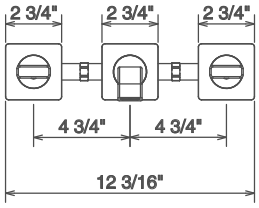

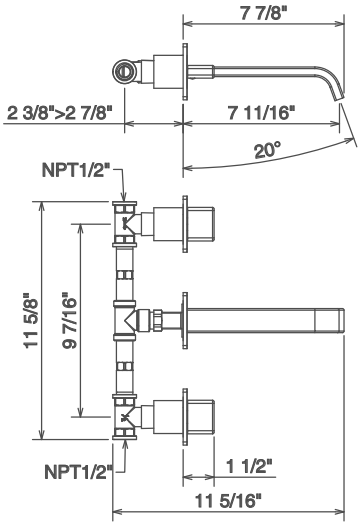

45801 ST CS

WIDESPREAD LAVATORY SET WITH POP-UP WASTE
MALANGEUR LAVABO 3 TROUS AVEC VIDAGE

SPOUT IN BRASS BAR
BEC EN BARRE LAITON

PC **$1255**

BN **$1760**

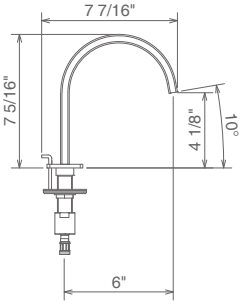

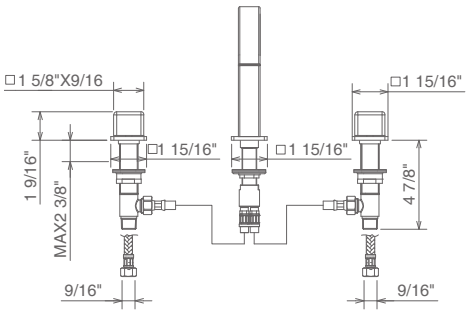

46244

WALL MOUNTED TUB SPOUT WITH AERATOR
BEC MURAL POUR BAIGNOIRE AVEC AERATEUR

PC **$450**

BN **$630**

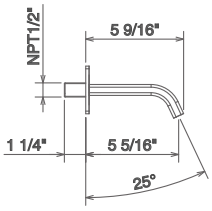

PROFILI

design Marco Poletti

la Torre

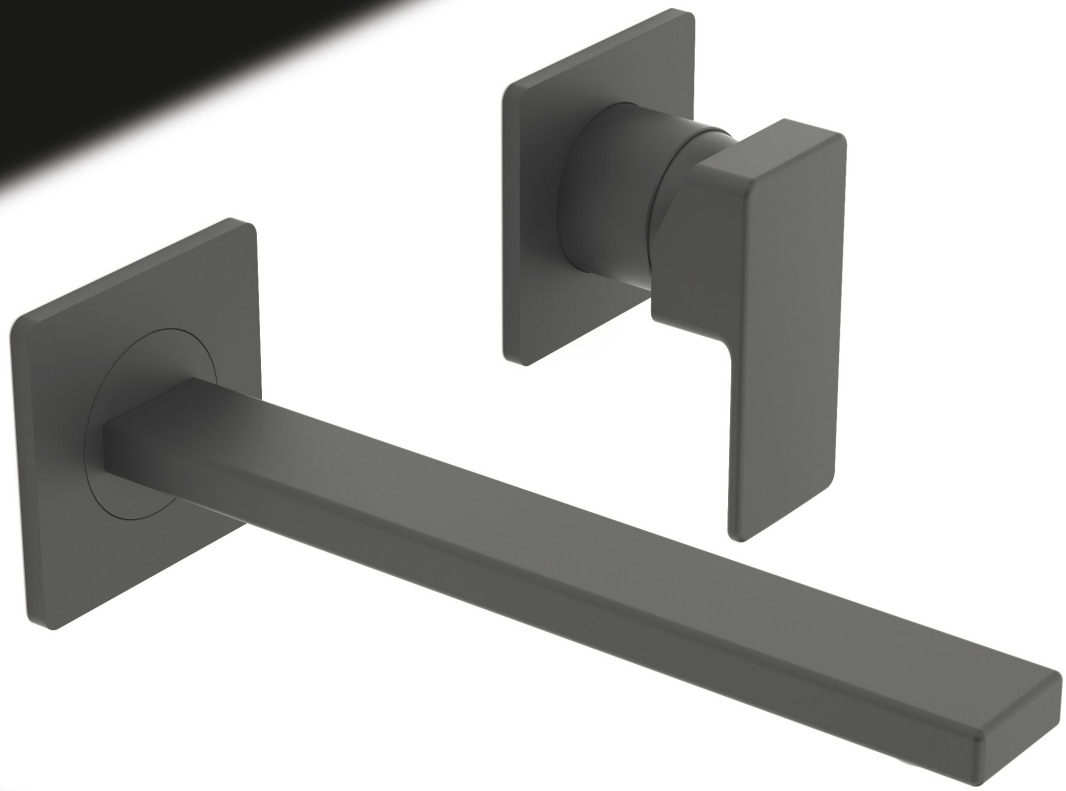

45003 CS

LAVATORY FAUCET WITH POP-UP WASTE WITH AERATOR
LAVABO AVEC VIDAGE, AVEC AERATEUR

PC	**$515**	**BL**	**$720**
BN	**$720**	**WH**	**$720**

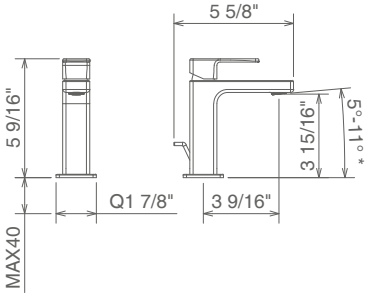

45003 TC

LAVATORY FAUCET WITHOUT POP-UP WASTE WITH AERATOR
LAVABO SANS VIDAGE AVEC AERATEUR
ADJUSTABLE AERATOR
AERATEUR ORIENTABLE

PC	**$465**	**BL**	**$655**
BN	**$655**	**WH**	**$655**

45001 CS

LAVATORY FAUCET WITH POP-UP WASTE WITH AERATOR
LAVABO AVEC VIDAGE, AVEC AERATEUR

PC	**$575**	**BL**	**$795**
BN	**$795**	**WH**	**$795**

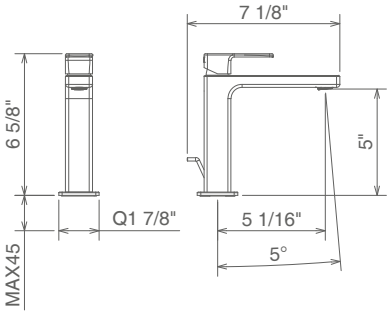

45001 TC

LAVATORY FAUCET WITHOUT POP-UP WASTE WITH AERATOR
LAVABO SANS VIDAGE AVEC AERATEUR

PC	**$525**	**BL**	**$735**
BN	**$735**	**WH**	**$735**

45508 TC

TALL LAVATORY FAUCET WITHOUT POP-UP WASTE WITH AERATOR
LAVABO HAUT SANS VIDAGE AVEC AERATEUR

PC	**$780**	**BL**	**$1090**
BN	**$1090**	**WH**	**$1090**

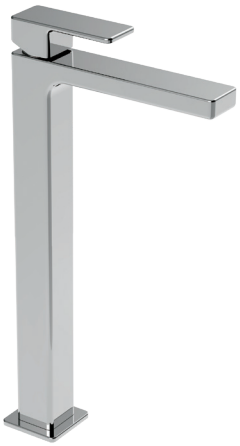

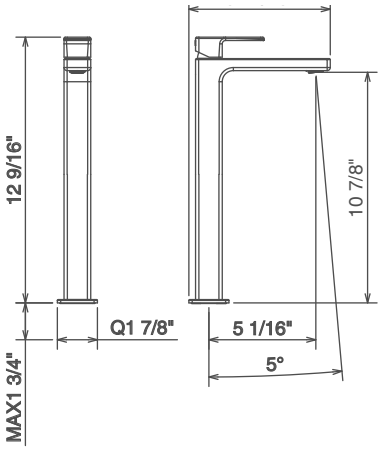

INDICATES IN STOCK

45601 CS

SIDE LEVER LAVATORY FAUCET WITH POP-UP WASTE
LAVABO AVEC VIDAGE

PC	**$590**	**BL**	**$825**
BN	**$825**	**WH**	**$825**

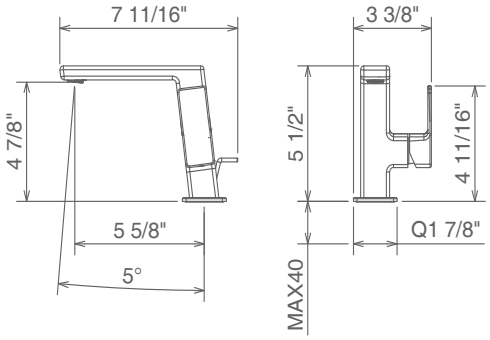

45601 TC

SIDE LEVER LAVATORY FAUCET WITHOUT POP-UP WASTE
LAVABO SANS VIDAGE

PC	**$540**	**BL**	**$755**
BN	**$755**	**WH**	**$755**

45200 JA TC

WALL MOUNTED TUB SPOUT WITH AERATOR
BEC MURAL POUR BAIGNOIRE AVEC AERATEUR

ADJUSTABLE AERATOR
AERATEUR ORIENTABLE

PC	**$745**	**BL**	**$1050**
BN	**$1050**	**WH**	**$1050**

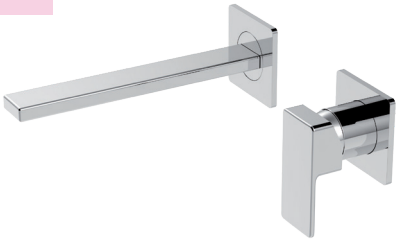

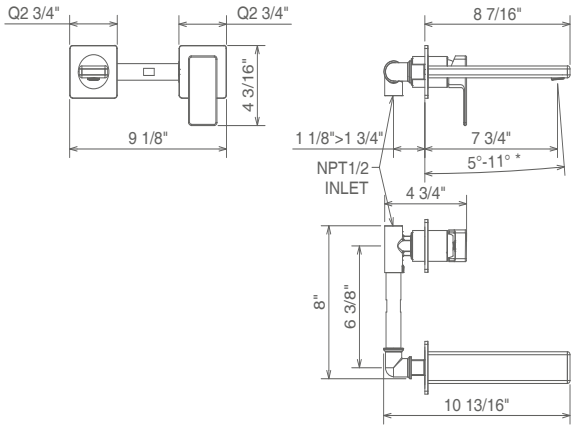

45801 JA CS

WIDESPREAD LAVATORY SET WITH POP-UP WASTE
MALANGEUR LAVABO 3 TROUS AVEC VIDAGE

ADJUSTABLE AERATOR
AERATEUR ORIENTABLE

PC	**$1235**	**BL**	**$1725**
BN	**$1725**	**WH**	**$1725**

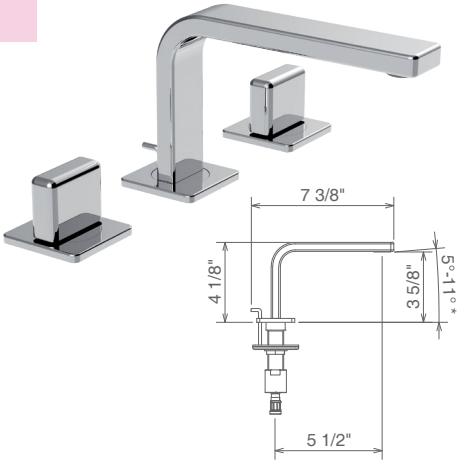

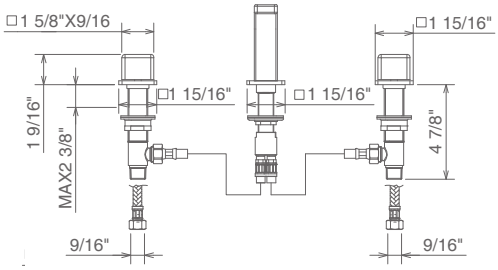

45801 ST CS

WIDESPREAD LAVATORY SET WITH POP-UP WASTE
MALANGEUR LAVABO 3 TROUS AVEC VIDAGE

PC	**$1255**	**BL**	**$1760**
BN	**$1760**	**WH**	**$1760**

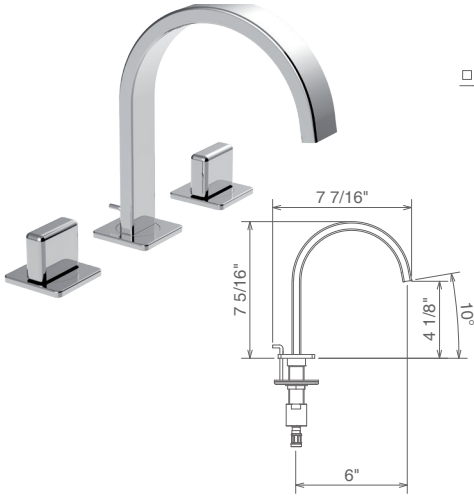

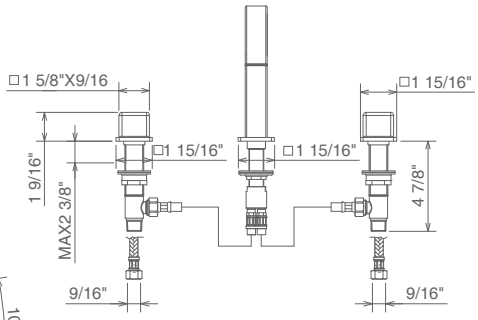

45280 JA TC

WALL MOUNTED LAVATORY SET WITHOUT POP-UP WASTE
MITIGEUR LAVABO À PAROIE SANS VIDAGE
ADJUSTABLE AERATOR
AERATEUR ORIENTABLE

PC	**$1025**	**BL**	**$1435**
BN	**$1435**	**WH**	**$1435**

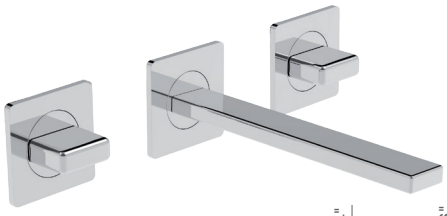

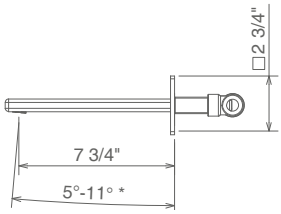

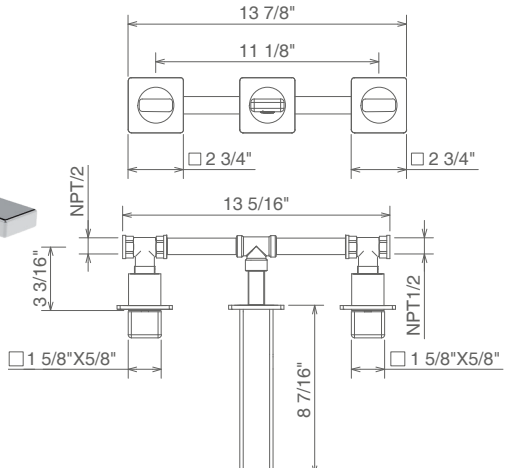

45847

DECK MOUNTED BATH-TUB SET
MELANGEUR 5 TROUS AU BORD BAIGNOIRE

PC	**$1950**	**BL**	**$2735**
BN	**$2735**	**WH**	**$2735**

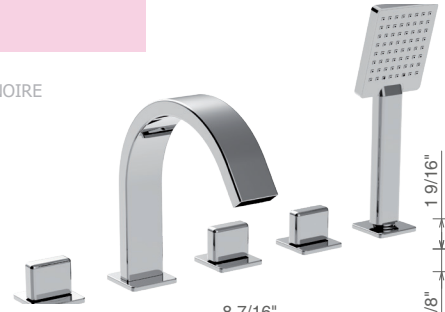

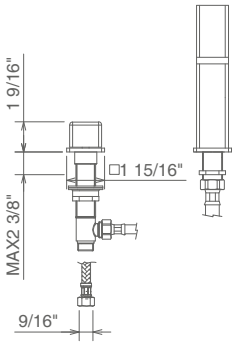

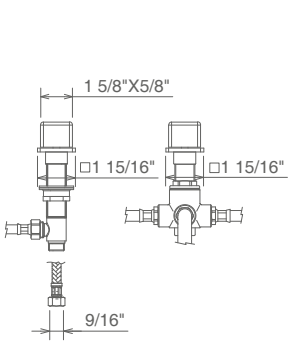

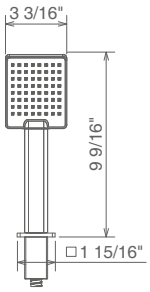

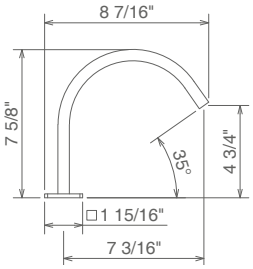

45044 PAV

FREESTANDING BATHTUB MIXER WITH SHOWER
MITIGEUR BAIGNOIRE À COLONNE

ITEM INCLUDES ROUGH IN AND PARTS TO BE INSTALLED PRIOR TO TILING
PART DE L'ARTICLE À ENCASTRER AVANT DE POSER

ADJUSTABLE AERATOR
AERATEUR ORIENTABLE

✔ **PC**	**$2655**	**BL**	**$3715**
BN	**$3715**	**WH**	**$3715**

FOR PRICE OF TRIM ONLY, DEDUCT $225

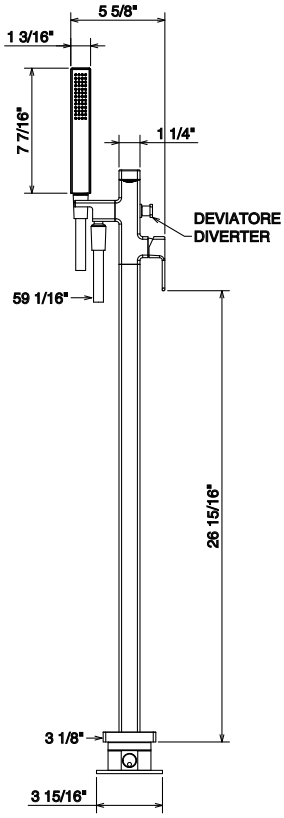

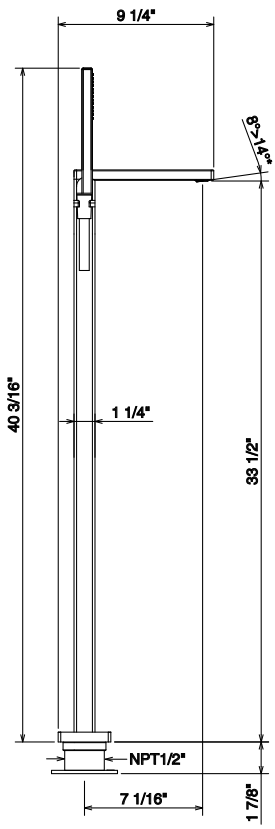

INC044PAV

FREESTANDING TUB FILLER ROUGH IN
CAN BE PURCHASED SEPARATELY

✔ **$225**

✔ INDICATES IN STOCK

45950

3/4 CONCEALED THERMOSTATIC VALVE WITH VOLUME CONTROL + 1/2 REDUCTION KIT
THERMOSTATIQUE À ENCASTRER AVEC ARRET, 3/4 AVEC KIT REDUCTION 1/2

PC	**$1360**	**BL**	**$1900**
BN	**$1900**	**WH**	**$1900**

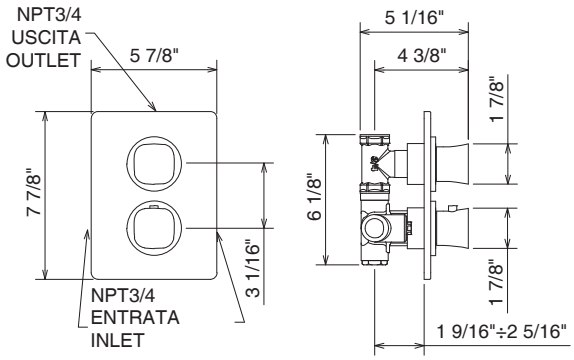

45950 R2

3/4 CONCEALED THERMOSTATIC VALVE WITH 2 ALTERNATIVE EXITS + 1/2 REDUCTION KIT.
1 FUNCTION AT A TIME
THERMOSTATIQUE À ENCASTRER AVEC 2 SORTIES ALTERNATIVES, 3/4 AVEC KIT REDUCTION 1/2

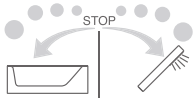

PC	**$1560**	**BL**	**$2185**
BN	**$2185**	**WH**	**$2185**

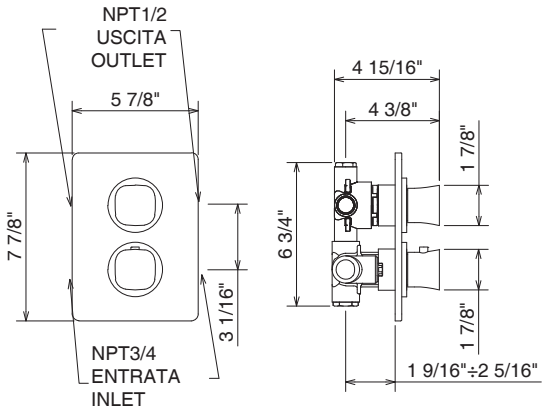

45950 R3

3/4 CONCEALED THERMOSTATIC VALVE WITH 3 ALTERNATIVE EXITS + 1/2 REDUCTION KIT.
1 FUNCTION AT A TIME
THERMOSTATIQUE À ENCASTRER AVEC 3 SORTIES ALTERNATIVES, 3/4 AVEC KIT REDUCTION 1/2

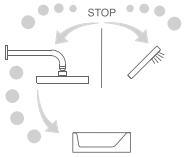

PC	**$1590**	**BL**	**$2230**
BN	**$2230**	**WH**	**$2230**

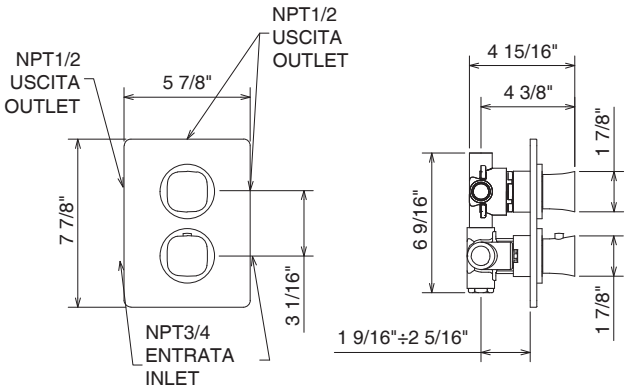

45062 3/4

3/4 CONCEALED THERMOSTATIC SHUT OFF VALVE
THERMOSTATIQUE À ENCASTRER ARRET 3/4

PC	**$345**	**BL**	**$485**
BN	**$485**	**WH**	**$485**

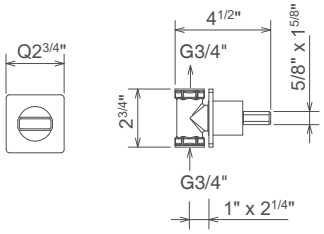

LAGHI
design Marco Poletti

LaTona

44001 CS

LAVATORY FAUCET WITH POP-UP WASTE WITH AERATOR
LAVABO AVEC VIDAGE, AVEC AERATEUR

✓ **PC**	**$620**	**BN**	**$870**	✓ **BL**	**$870**
✓ **WH**	**$870**	**BC**	**$775**	**NC**	**$775**
PG	**$1120**				

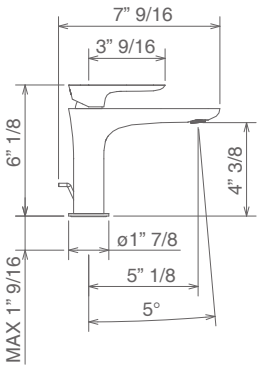

44001 TC

LAVATORY FAUCET WITHOUT POP-UP WASTE WITH AERATOR
LAVABO SANS VIDAGE AVEC AERATEUR

PC	**$575**	**BN**	**$795**	**BL**	**$795**
WH	**$795**	**BC**	**$720**	**NC**	**$720**
PG	**$1035**				

44508 TC

TALL LAVATORY FAUCET WITHOUT POP-UP WASTE WITH AERATOR
LAVABO HAUT SANS VIDAGE AVEC AERATEUR

PC	**$885**	**BN**	**$1240**	**BL**	**$1240**
WH	**$1240**	**BC**	**$1105**	**NC**	**$1105**
PG	**$1590**				

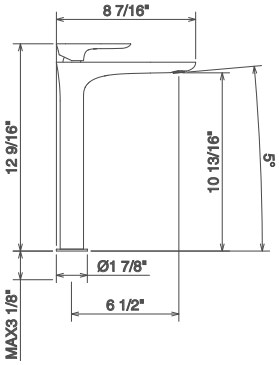

44601 PAV

FREESTANDING LAVATORY FAUCET
MITIGEUR POUR LAVABO À COLONNE

AERATORE ORIENTABILE
ADJUSTABLE AERATOR
AERATEUR ORIENTABLE

PC	**$1960**	**BN**	**$2740**	**BL**	**$2740**
WH	**$2740**	**BC**	**$2445**	**NC**	**$2445**
PG	**$3525**				

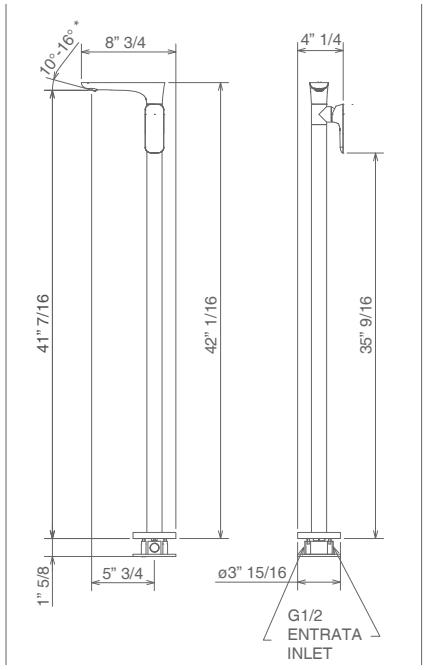

44845

DECK MOUNTED BATH-TUB SET
MELANGEUR 5 TROUS AU BORD BAIGNOIRE

PC	**$1925**	**BN**	**$2700**	**BL**	**$2700**
WH	**$2700**	**BC**	**$2395**	**NC**	**$2395**
PG	**$3470**				

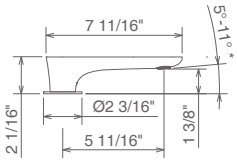

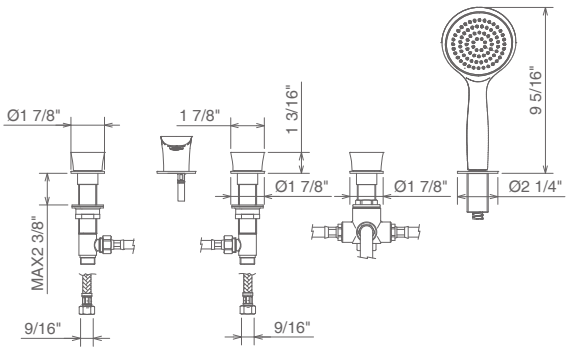

44200 TC

WALL MOUNTED LAVATORY SET WITHOUT POP-UP WASTE
MITIGEUR LAVABO À PAROIE SANS VIDAGE

ADJUSTABLE AERATOR
AERATEUR ORIENTABLE

PC	**$760**	**BN**	**$1060**	**BL**	**$1060**
WH	**$1060**	**BC**	**$945**	**NC**	**$945**
PG	**$1365**				

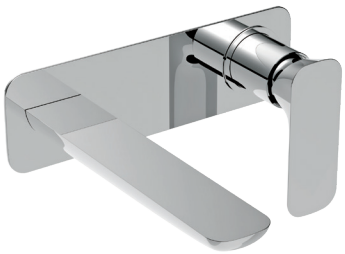

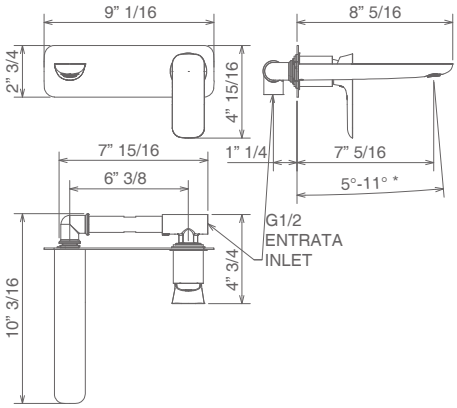

44280 TC

WALL MOUNTED LAVATORY SET WITHOUT POP-UP WASTE
MITIGEUR LAVABO À PAROIE SANS VIDAGE

ADJUSTABLE AERATOR
AERATEUR ORIENTABLE

PC	**$1115**	**BN**	**$1565**	**BL**	**$1565**
WH	**$1565**	**BC**	**$1400**	**NC**	**$1400**
PG	**$1995**				

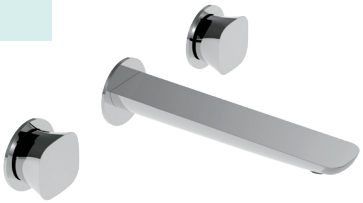

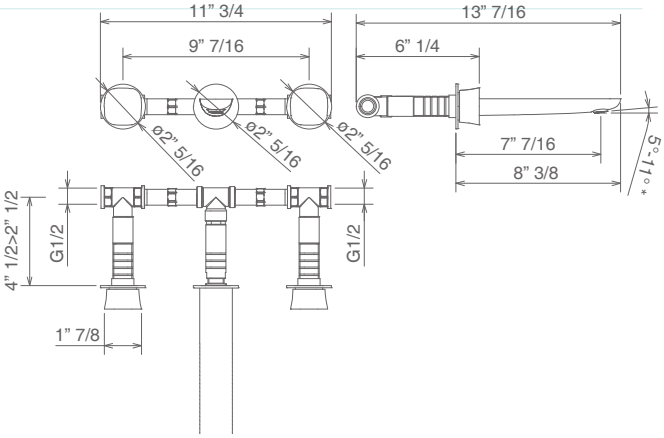

44801 CS

WIDESPREAD LAVATORY SET WITH POP-UP WASTE
MALANGEUR LAVABO 3 TROUS AVEC VIDAGE

ADJUSTABLE AERATOR
AERATEUR ORIENTABLE

✔ **PC**	**$1060**	**BN**	**$1485**	✔ **BL**	**$1485**
WH	**$1485**	**BC**	**$1325**	**NC**	**$1325**
PG	**$2490**				

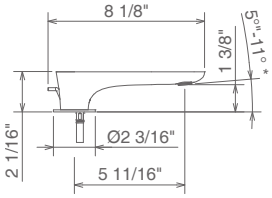

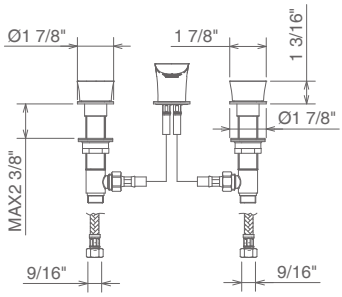

44044 PAV

FREESTANDING BATHTUB MIXER WITH SHOWER
MITIGEUR BAIGNOIRE À COLONNE

ITEM INCLUDES PARTS TO BE INSTALLED PRIOR TO TILING
PART DE L'ARTICLE À ENCASTRER AVANT DE POSER
CARRELLAGE DE FINITION

PC	**$2085**	**BN**	**$2915**	**BL**	**$2915**
WH	**$2915**	**BC**	**$2605**	**NC**	**$2605**
PG	**$3750**				

FOR PRICE OF TRIM ONLY, DEDUCT $225

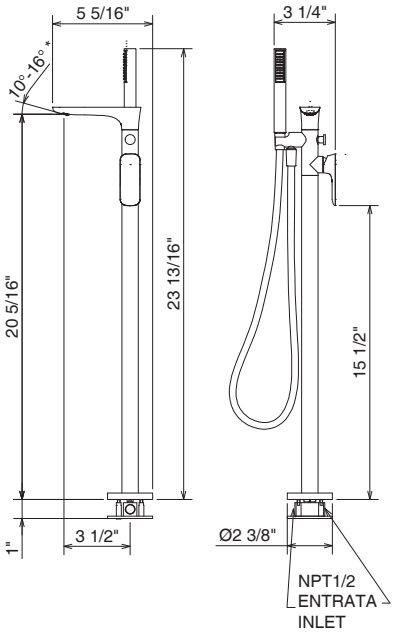

INC044PAV

FREESTANDING TUB FILLER ROUGH IN
CAN BE PURCHASED SEPARATELY

✔ **$225**

✔ INDICATES IN STOCK

Termostatico

44950

3/4 CONCEALED THERMOSTATIC VALVE WITH VOLUME CONTROL + 1/2 REDUCTION KIT
THERMOSTATIQUE À ENCASTRER AVEC ARRET, 3/4 AVEC KIT REDUCTION 1/2

PC	**$1385**	**BN**	**$1935**	**BL**	**$1935**
WH	**$1935**	**BC**	**$1730**	**NC**	**$1730**
PG	**$2490**				

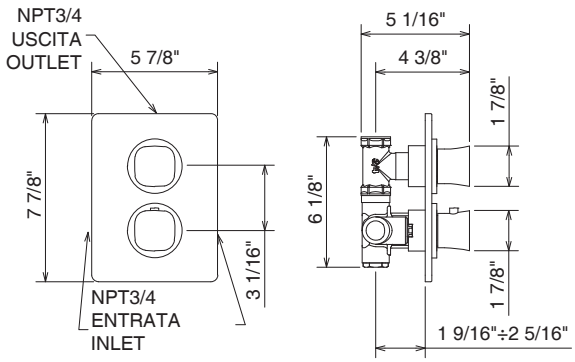

44950 R2

3/4 CONCEALED THERMOSTATIC VALVE WITH 2 ALTERNATIVE EXITS + 1/2 REDUCTION KIT
1 FUNCTION AT A TIME
THERMOSTATIQUE À ENCASTRER AVEC 2 SORTIES ALTERNATIVES, 3/4 AVEC KIT REDUCTION 1/2

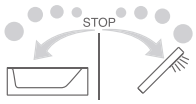

PC	**$1590**	**BN**	**$2230**	**BL**	**$2230**
WH	**$2230**	**BC**	**$1990**	**NC**	**$1990**
PG	**$2865**				

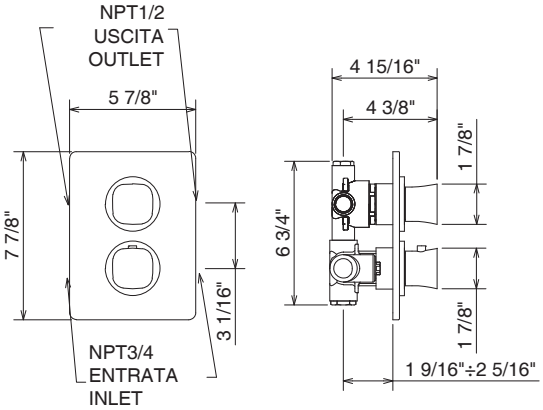

44950 R3

3/4 CONCEALED THERMOSTATIC VALVE WITH 3 ALTERNATIVE EXITS + 1/2 REDUCTION KIT
1 FUNCTION AT A TIME
THERMOSTATIQUE À ENCASTRER AVEC 3 SORTIES ALTERNATIVES, 3/4 AVEC KIT REDUCTION 1/2

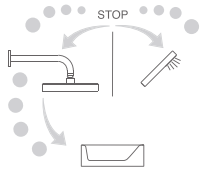

PC	**$1620**	**BN**	**$2270**	**BL**	**$2270**
WH	**$2270**	**BC**	**$2025**	**NC**	**$2025**
PG	**$2915**				

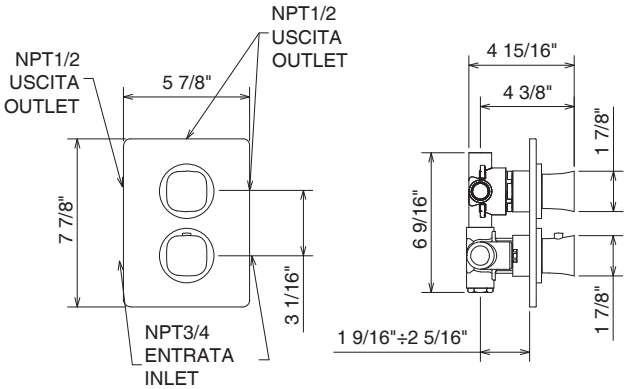

44062 3/4

3/4 CONCEALED THERMOSTATIC SHUT OFF VALVE
THERMOSTATIQUE À ENCASTRER ARRET 3/4

PC	**$345**	**BN**	**$485**	**BL**	**$485**
WH	**$485**	**BC**	**$430**	**NC**	**$430**
PG	**$625**				

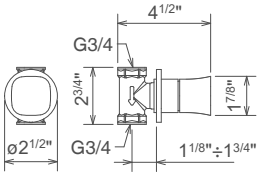

TAYA

40001 CS

LAVATORY FAUCET WITH POP-UP WASTE WITH AERATOR
LAVABO AVEC VIDAGE, AVEC AERATEUR

PC	**$495**	**BN**	**$695**
BL	**$695**	**WH**	**$695**

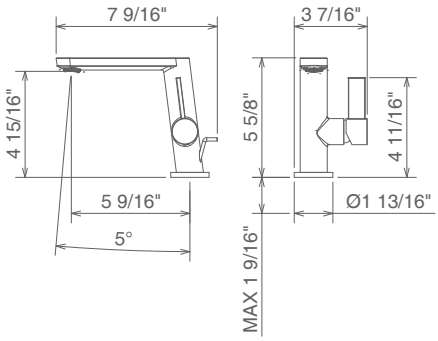

40001 TC

LAVATORY FAUCET WITHOUT POP-UP WASTE WITH AERATOR
LAVABO SANS VIDAGE AVEC AERATEUR

PC	**$460**	**BN**	**$640**
BL	**$640**	**WH**	**$640**

40200 TC

WALL MOUNTED LAVATORY SET WITHOUT POP-UP WASTE
MITIGEUR LAVABO À PAROIE SANS VIDAGE

PC	**$615**	**BN**	**$860**
BL	**$860**	**WH**	**$860**

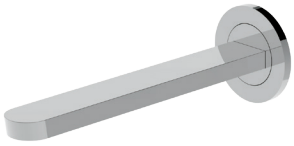

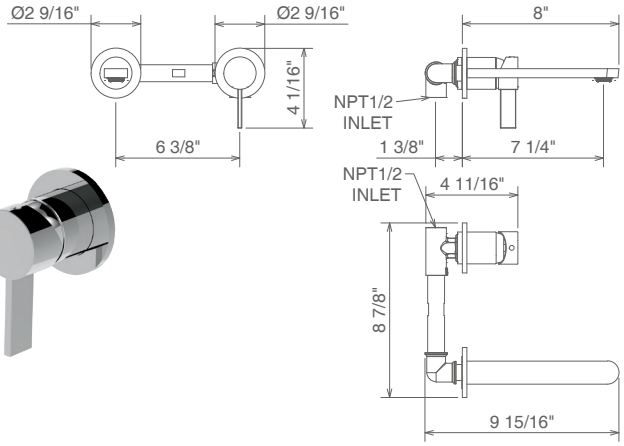

WODA
design Paolo Schianchi

37001 CS

LAVATORY FAUCET WITH POP-UP WASTE WITH AERATOR
LAVABO AVEC VIDAGE, AVEC AERATEUR

PC **$595**
BN **$830**

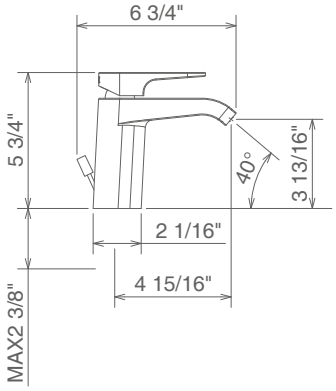

37001 TC

LAVATORY FAUCET WITHOUT POP-UP WASTE WITH AERATOR
LAVABO SANS VIDAGE AVEC AERATEUR

PC **$545**
BN **$765**

37200 TC

WALL MOUNTED LAVATORY SET WITHOUT POP-UP WASTE
MITIGEUR LAVABO À PAROIE SANS VIDAGE

PC **$860**
BN **$1195**

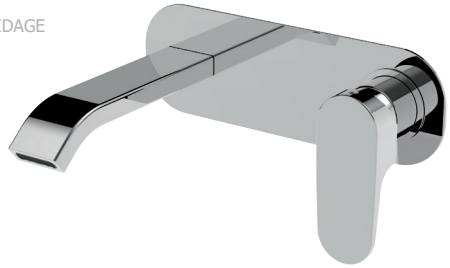

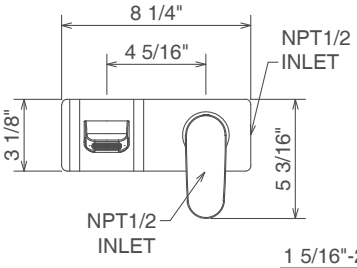

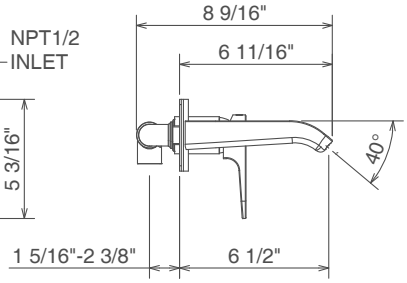

ITALIA 150

35001 CS

LAVATORY FAUCET WITH POP-UP WASTE WITH AERATOR
LAVABO AVEC VIDAGE, AVEC AERATEUR

PC **$565**
BN **$790**

35001 TC

LAVATORY FAUCET WITHOUT POP-UP WASTE WITH AERATOR
LAVABO SANS VIDAGE AVEC AERATEUR

PC **$495**
BN **$695**

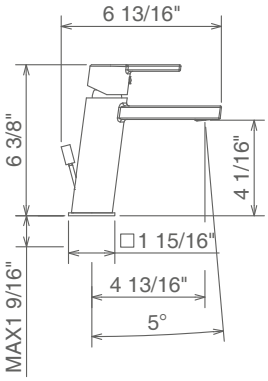

35401 TC

MID SIZE LAVATORY FAUCET WITHOUT POP UP WASTE
MITIGEUR LAVABO MOYEN SANS VIDAGE

PC **$835**
BN **$1170**

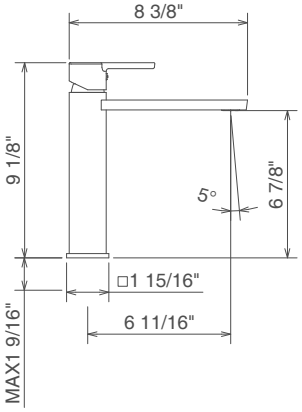

35501 TC

TALL LAVATORY FAUCET WITHOUT POP-UP WASTE WITH AERATOR
LAVABO HAUT SANS VIDAGE AVEC AERATEUR

PC **$880**
BN **$1230**

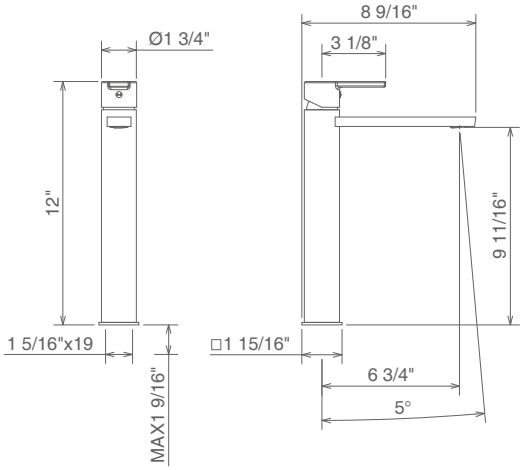

35200 TC

WALL MOUNTED LAVATORY SET WITHOUT POP-UP WASTE
MITIGEUR LAVABO À PAROIE SANS VIDAGE

PC **$655**
BN **$925**

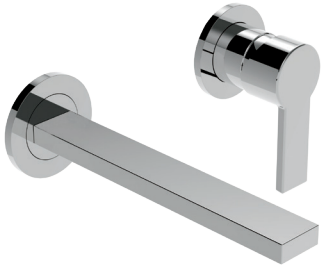

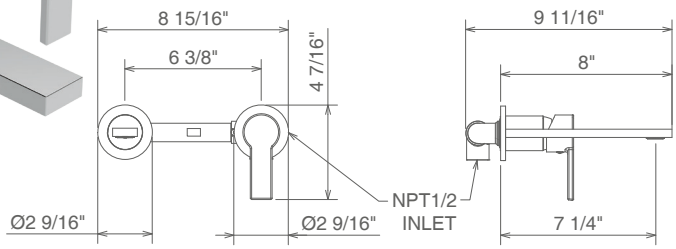

STUDIO

31001 CS

LAVATORY FAUCET WITH POP-UP WASTE WITH AERATOR
LAVABO AVEC VIDAGE, AVEC AERATEUR

PC	**$515**	**BN**	**$725**
BL	**$675**	**WH**	**$675**

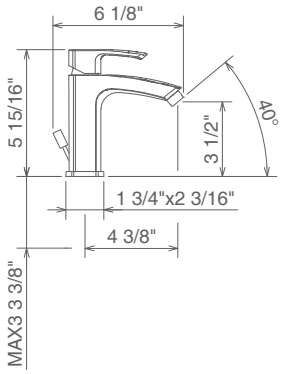

31001 TC

LAVATORY FAUCET WITHOUT POP-UP WASTE WITH AERATOR
LAVABO SANS VIDAGE AVEC AERATEUR

PC	**$470**	**BN**	**$660**
BL	**$615**	**WH**	**$615**

31502 TC

TALL LAVATORY FAUCET WITHOUT POP-UP WASTE WITH AERATOR
LAVABO HAUT SANS VIDAGE AVEC AERATEUR

PC	**$710**	**BN**	**$995**
BL	**$930**	**WH**	**$930**

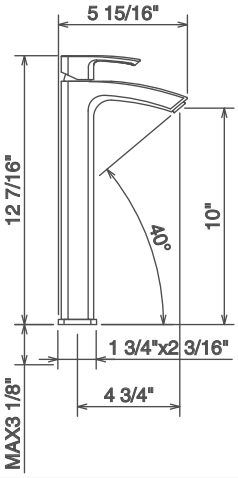

31200 TC

WALL MOUNTED LAVATORY SET WITHOUT POP-UP WASTE
MITIGEUR LAVABO À PAROIE SANS VIDAGE

PC	**$675**	**BN**	**$945**
BL	**$880**	**WH**	**$880**

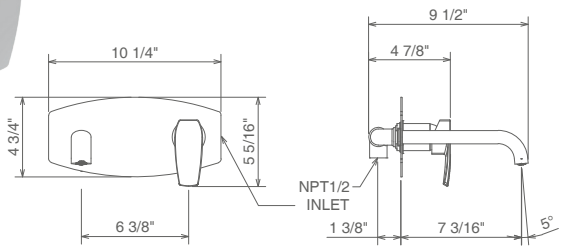

31800 CS

WIDESPREAD LAVATORY SET WITH POP-UP WASTE
MALANGEUR LAVABO 3 TROUS AVEC VIDAGE

PC	**$945**	**BN**	**$1325**
BL	**$1230**	**WH**	**$1230**

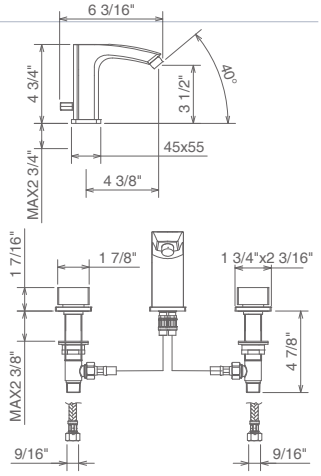

OVALINE

OVALINE

26001 CS

LAVATORY FAUCET WITH POP-UP WASTE WITH AERATOR
LAVABO AVEC VIDAGE, AVEC AERATEUR

PC **$545**

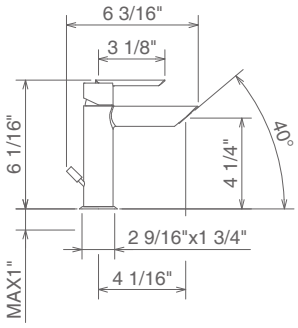

26001 TC

LAVATORY FAUCET WITHOUT POP-UP WASTE WITH AERATOR
LAVABO SANS VIDAGE AVEC AERATEUR

PC **$495**

26501 TC

TALL LAVATORY FAUCET WITHOUT POP-UP WASTE WITH AERATOR
LAVABO HAUT SANS VIDAGE AVEC AERATEUR

PC **$785**

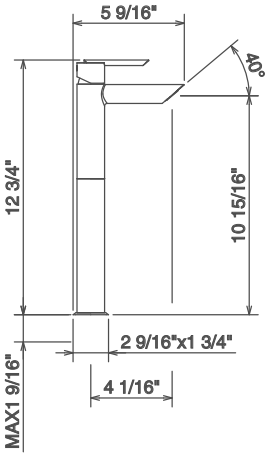

26200 TC

WALL MOUNTED LAVATORY SET WITHOUT POP-UP WASTE
MITIGEUR LAVABO À PAROIE SANS VIDAGE

PC **$785**

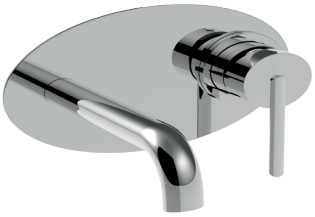

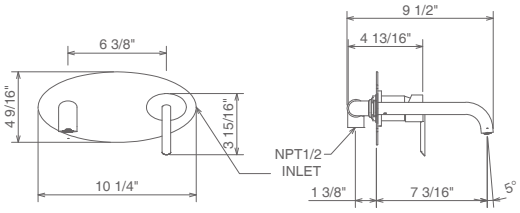

26050

BUILT-IN MIXING VALVE
MITIGEUR À ENCASTRER

PC **$390**

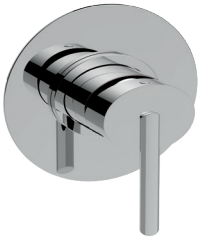

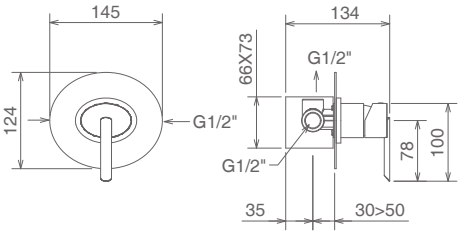

26045

DECK MOUNTED BATH TUB SET 3 HOLES
MITIGEUR AU BORD BIGNOIRE 3 TROUS

PC **$1555**

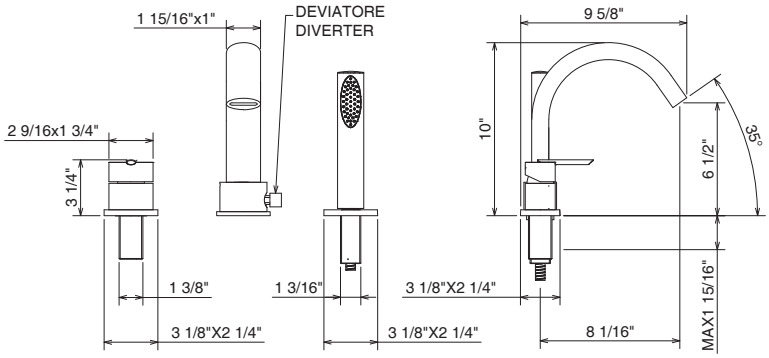

INDICATES IN STOCK

26150 T

TRIM FOR PRESSURE BALANCE SHOWER MIXER
PARTIE EXTERIEURE POUR PRESSURE BALANCE

PC **$225**

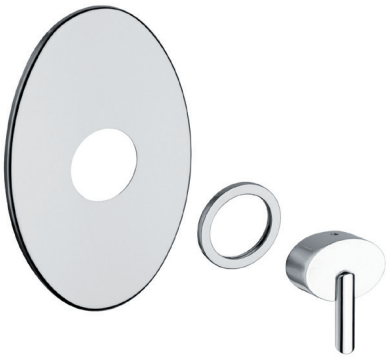

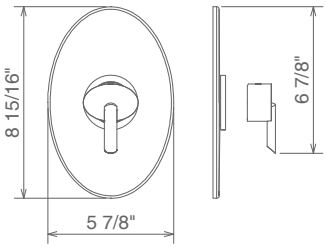

50697 VOL CR

ONLY BUILT-IN BODY VOLUME CONTROL PRESSURE BALANCE SHOWER MIXER
MITIGEUR DOUCHE ENCASTRER PRESSURE BALANCED À CONTROL VOLUME - SEULEMENT CORPS

$380

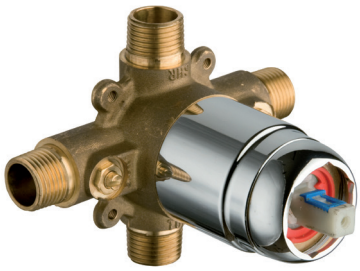

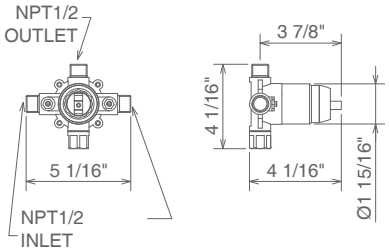

26150 R T

TRIM FOR PRESSURE BALANCE WITH DIVERTER
PARTIE EXTERIEURE POUR PRESSURE BALANCE AVEC ENVERSEUR

PC **$240**

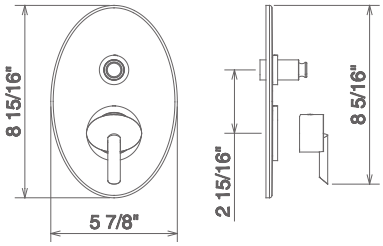

50797 VOL CR

ONLY BUILT-IN BODY VOLUME CONTROL PRESSURE BALANCE SHOWER MIXER WITH DIVERTER
MITIGEUR DOUCHE PRESSURE BALANCED ENCASTRER À CONTROL VOLUME AVEC ENVERSEUR - SEULEMENT CORPS

$530

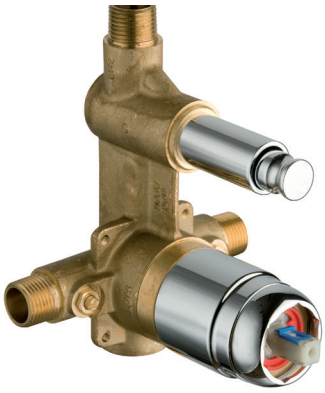

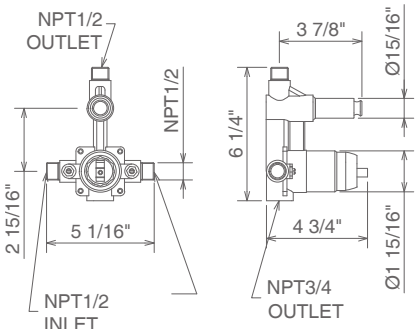

KONVEX

Lavabo

17001 CS

LAVATORY FAUCET WITH POP-UP WASTE WITH AERATOR
LAVABO AVEC VIDAGE, AVEC AERATEUR

PC $495 BN $695
PG $895

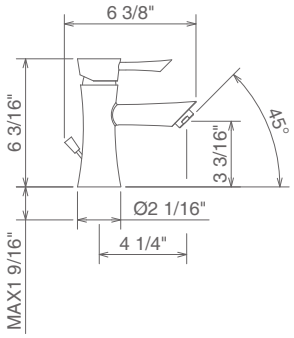

17001 TC

LAVATORY FAUCET WITHOUT POP-UP WASTE WITH AERATOR
LAVABO SANS VIDAGE AVEC AERATEUR

PC $450 BN $630
PG $795

17501 TC

TALL LAVATORY FAUCET WITHOUT POP-UP WASTE WITH AERATOR
LAVABO HAUT SANS VIDAGE AVEC AERATEUR

PC $685 BN $955
PG $1230

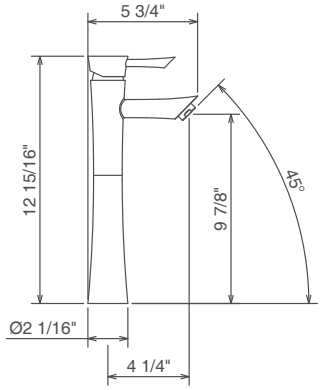

17200 TC

WALL MOUNTED LAVATORY SET WITHOUT POP-UP WASTE
MITIGEUR LAVABO À PAROIE SANS VIDAGE

PC $540 BN $755
PG $975

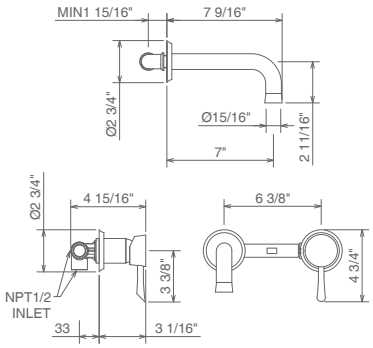

Incassi doccia

17050

BUILT-IN MIXING VALVE
MITIGEUR À ENCASTRER

PC $270 BN $380
PG $490

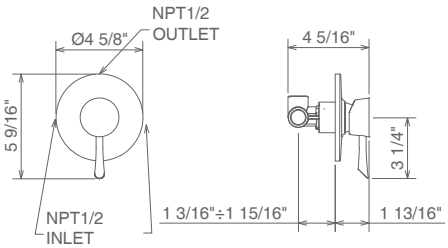

INDICATES IN STOCK

17150 T

TRIM FOR PRESSURE BALANCE SHOWER MIXER
PARTIE EXTERIEURE POUR PRESSURE BALANCE

PC **$270** **BN** **$380**
PG **$490**

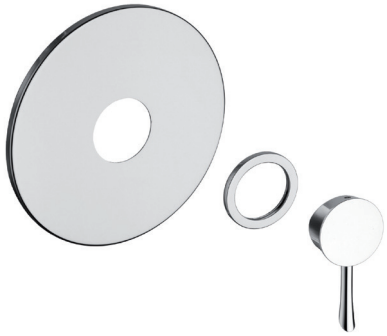

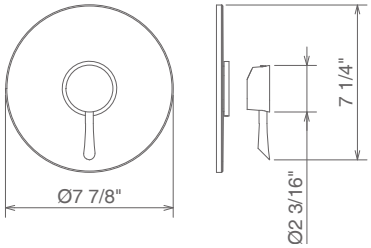

50697 VOL CR

ONLY BUILT-IN BODY VOLUME CONTROL PRESSURE BALANCE SHOWER MIXER
MITIGEUR DOUCHE ENCASTRER PRESSURE BALANCED À CONTROL VOLUME - SEULEMENT CORPS

$380

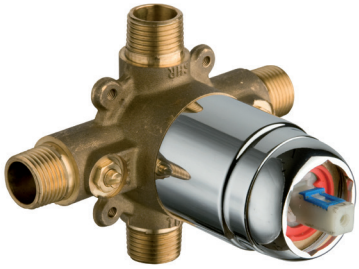

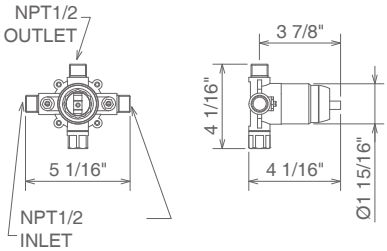

17150 R T

TRIM FOR PRESSURE BALANCE WITH DIVERTER
PARTIE EXTERIEURE POUR PRESSURE BALANCE AVEC ENVERSEUR

PC **$295** **BN** **$410**
PG **$530**

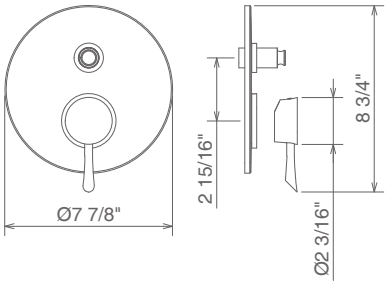

50797 VOL CR

ONLY BUILT-IN BODY VOLUME CONTROL PRESSURE BALANCE SHOWER MIXER WITH DIVERTER
MITIGEUR DOUCHE PRESSURE BALANCED ENCASTRER À CONTROL VOLUME AVEC ENVERSEUR - SEULEMENT CORPS

$530

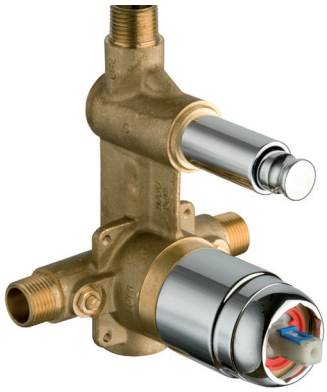

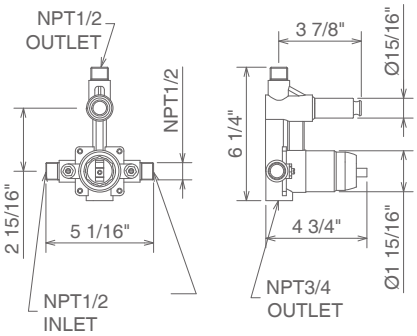

NEWTECH

laTorre

12001 CS

LAVATORY FAUCET WITH POP-UP WASTE WITH AERATOR
LAVABO AVEC VIDAGE, AVEC AERATEUR

PC	**$380**	**BN**	**$530**
BL	**$530**	**WH**	**$530**

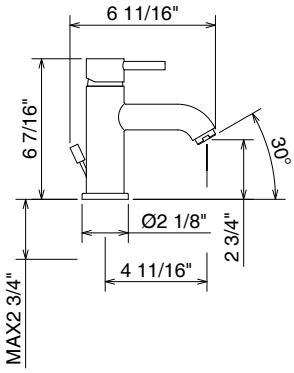

12001 TC

LAVATORY FAUCET WITHOUT POP-UP WASTE WITH AERATOR
LAVABO SANS VIDAGE AVEC AERATEUR

PC	**$330**	**BN**	**$465**
BL	**$465**	**WH**	**$465**

12501 TC

TALL LAVATORY FAUCET WITHOUT POP-UP WASTE WITH AERATOR
LAVABO HAUT SANS VIDAGE AVEC AERATEUR

PC	**$555**	**BN**	**$755**
BL	**$775**	**WH**	**$755**

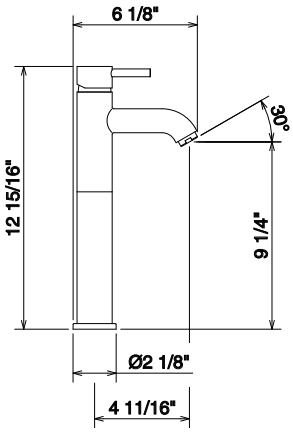

12581 TC

LAVATORY FAUCET WITH EXTRACTABLE SHOWER
MITIGEUR LAVABO AVEC DOUCHETTE

PC **$730**

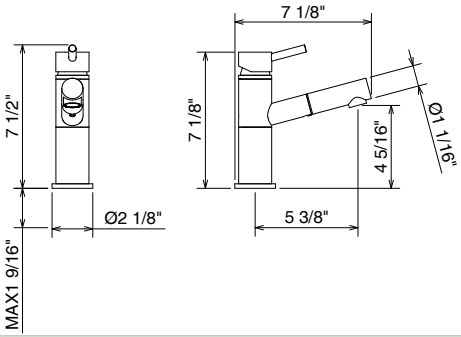

12200 TC

WALL MOUNTED LAVATORY SET WITHOUT POP-UP WASTE
MITIGEUR LAVABO À PAROIE SANS VIDAGE

PC	**$475**	**BN**	**$665**
BL	**$665**	**WH**	**$665**

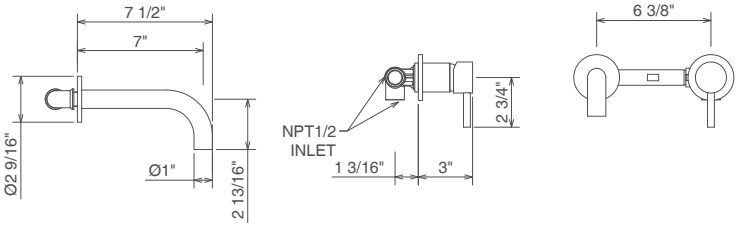

12144/10

WALL MOUNTED LAVATORY SPOUT
BEC LAVABO À PAROIE

PC	**$195**	**BN**	**$275**
BL	**$275**	**WH**	**$275**

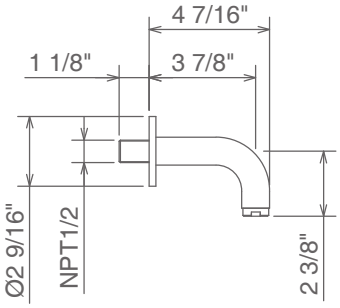

INDICATES IN STOCK

12144/20

WALL MOUNTED LAVATORY SPOUT
BEC LAVABO À PAROIE

PC	**$195**	**BN**	**$275**
BL	**$275**	**WH**	**$275**

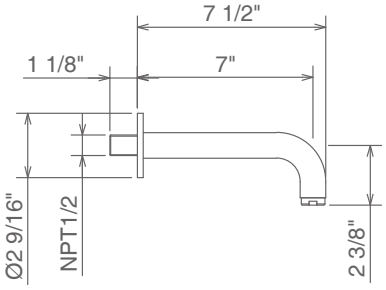

12601 CS

SIDE LEVER LAVATORY FAUCET WITH TALL SPOUT, WITH POP UP WASTE
MITIGEUR LAVABO AVEC BEC HAUT, AVEC VIDAGE

PC	**$560**	**BN**	**$780**
BL	**$780**	**WH**	**$780**

12601 TC

SIDE LEVER LAVATORY FAUCET WITH TALL SPOUT, WITHOUT POP UP WASTE
MITIGEUR LAVABO AVEC BEC HAUT, SANS VIDAGE

PC	**$510**	**BN**	**$715**
BL	**$715**	**WH**	**$715**

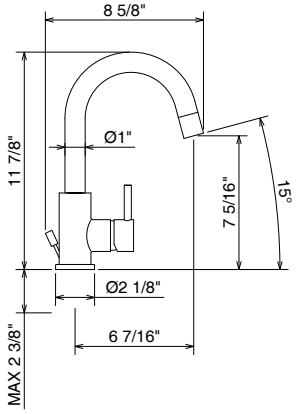

14601 TO CS

SINGLE HOLE LAVATORY MIXER WITH POP-UP WASTE
MELANGEUR MONOTROU AVEC BEC HAUT ET VIDAGE

PC	**$740**	**BN**	**$1035**
BL	**$1035**	**WH**	**$1035**

14601 TO CS

SINGLE HOLE LAVATORY MIXER WITHOUT POP-UP WASTE
MELANGEUR MONOTROU AVEC BEC HAUT, SANS VIDAGE

PC	**$695**	**BN**	**$970**
BL	**$970**	**WH**	**$970**

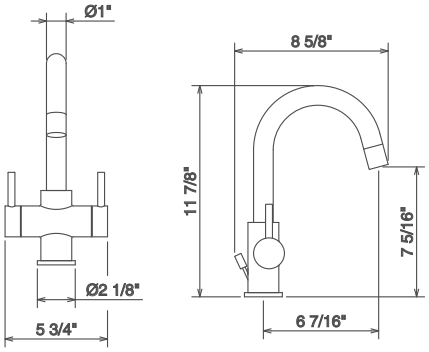

12044 PAV

FREESTANDING BATHTUB MIXER WITH SHOWER
MITIGEUR BAIGNOIRE À COLONNE

ITEM INCLUDES PARTS TO BE INSTALLED PRIOR TO TILING
PART DE L'ARTICLE À ENCASTRER AVANT DE POSER CARRELLAGE DE FINITION

PC	**$2085**	**BN**	**$2915**
BL	**$2915**	**WH**	**$2915**

FOR PRICE OF TRIM ONLY, DEDUCT $225

INC044PAV

FREESTANDING TUB FILLER ROUGH IN
CAN BE PURCHASED SEPARATELY

$225

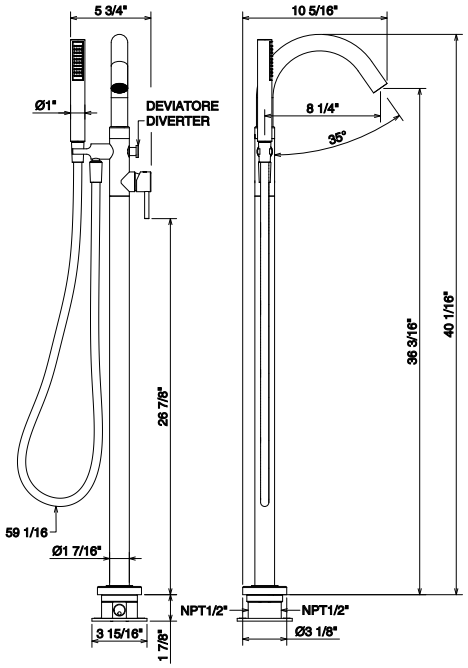

12950

3/4 CONCEALED THERMOSTATIC VALVE WITH VOLUME CONTROL + 1/2 REDUCTION KIT
THERMOSTATIQUE À ENCASTRER AVEC ARRET, 3/4 AVEC KIT REDUCTION 1/2

PC	**$1330**	**BN**	**$1860**
BL	**$1860**	**WH**	**$1860**

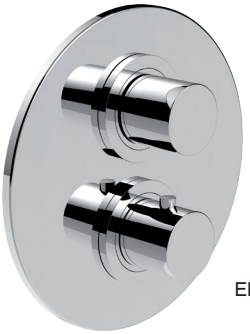

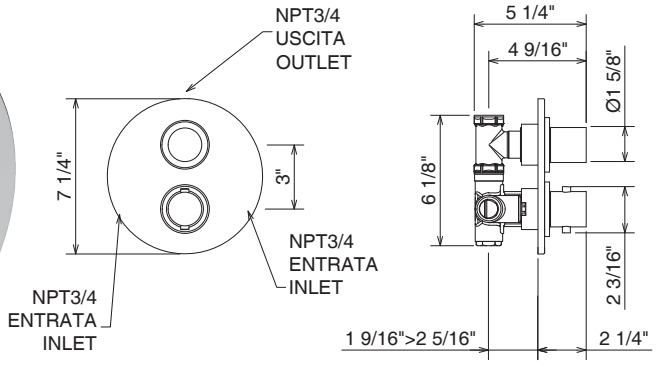

12950 R2

3/4 CONCEALED THERMOSTATIC VALVE WITH 2 ALTERNATIVE EXITS + 1/2 REDUCTION KIT
1 FUNCTION AT A TIME
THERMOSTATIQUE À ENCASTRER AVEC 2 SORTIES ALTERNATIVES, 3/4 AVEC KIT REDUCTION 1/2

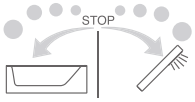

PC	**$1535**	**BN**	**$2150**
BL	**$2150**	**WH**	**$2150**

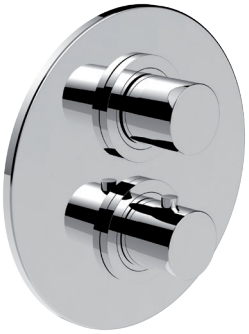

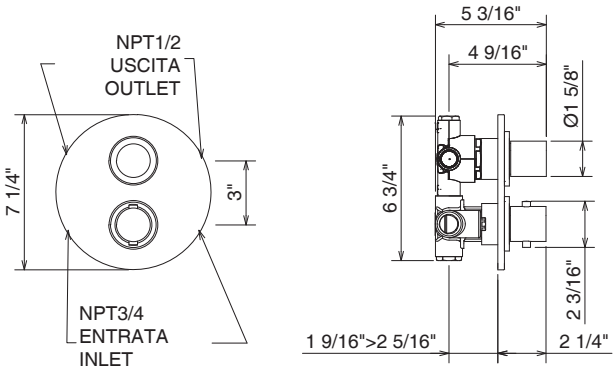

12950 R3

3/4 CONCEALED THERMOSTATIC VALVE WITH 3 ALTERNATIVE EXITS + 1/2 REDUCTION KIT
1 FUNCTION AT A TIME
THERMOSTATIQUE À ENCASTRER AVEC 3 SORTIES ALTERNATIVES, 3/4 AVEC KIT REDUCTION 1/2

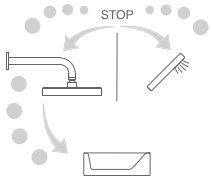

PC	**$1565**	**BN**	**$2190**
BL	**$2190**	**WH**	**$2190**

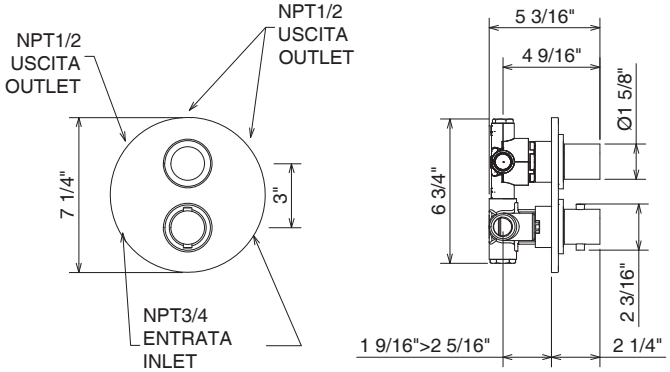

12062 3/4

3/4 CONCEALED THERMOSTATIC SHUT OFF VALVE
THERMOSTATIQUE À ENCASTRER ARRET 3/4

PC	**$245**	**BN**	**$345**
BL	**$345**	**WH**	**$345**

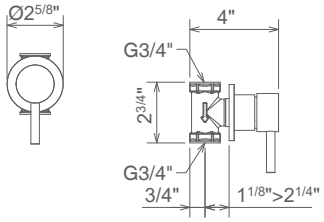

INDICATES IN STOCK

12150 T

TRIM FOR PRESSURE BALANCE SHOWER MIXER
PARTIE EXTERIEURE POUR PRESSURE BALANCE

PC	**$270**	**BN**	**$380**
BL	**$380**	**WH**	**$380**

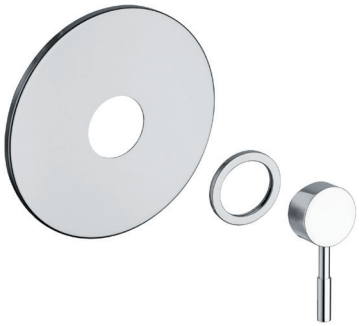

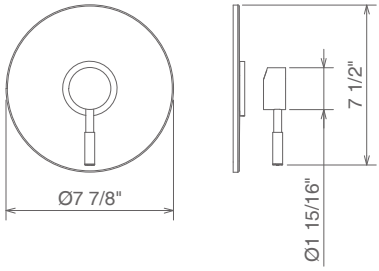

50697 VOL CR

ONLY BUILT-IN BODY VOLUME CONTROL PRESSURE BALANCE SHOWER MIXER
MITIGEUR DOUCHE ENCASTRER PRESSURE BALANCED À CONTROL VOLUME - SEULEMENT CORPS

$380

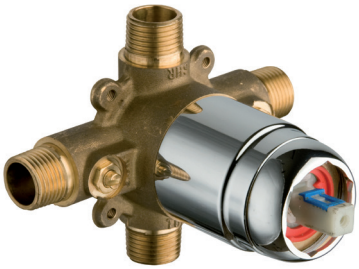

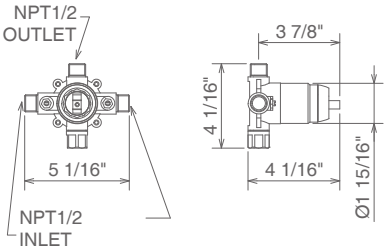

12150 R T

TRIM FOR PRESSURE BALANCE WITH DIVERTER
PARTIE EXTERIEURE POUR PRESSURE BALANCE AVEC ENVERSEUR

PC	**$290**	**BN**	**$405**
BL	**$405**	**WH**	**$405**

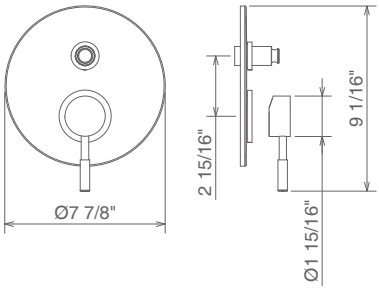

50797 VOL CR

ONLY BUILT-IN BODY VOLUME CONTROL PRESSURE BALANCE SHOWER MIXER WITH DIVERTER
MITIGEUR DOUCHE PRESSURE BALANCED ENCASTRER À CONTROL VOLUME AVEC ENVERSEUR - SEULEMENT CORPS

$530

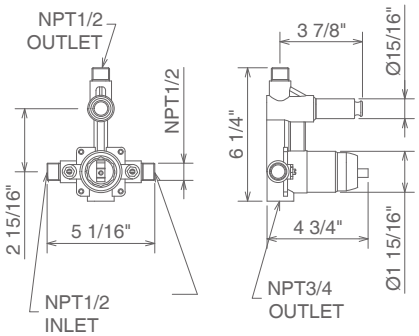

CROSSTECH

12803 CS

WIDESPREAD LAVATORY SET WITH POP-UP WASTE
MALANGEUR LAVABO 3 TROUS AVEC VIDAGE

PC	**$845**	**BN**	**$1185**
BL	**$1185**	**WH**	**$1185**

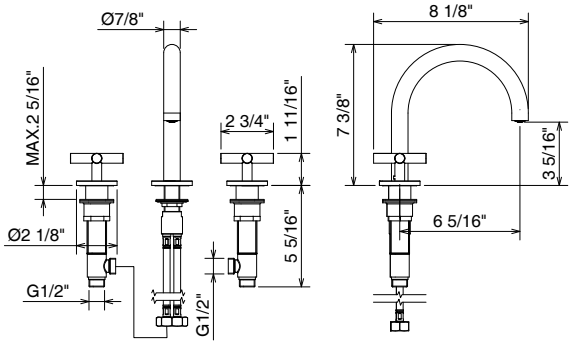

12283 TC

WALL MOUNTED LAVATORY SET WITHOUT POP-UP WASTE
MITIGEUR LAVABO À PAROIE SANS VIDAGE

PC	**$680**	**BN**	**$950**
BL	**$950**	**WH**	**$950**

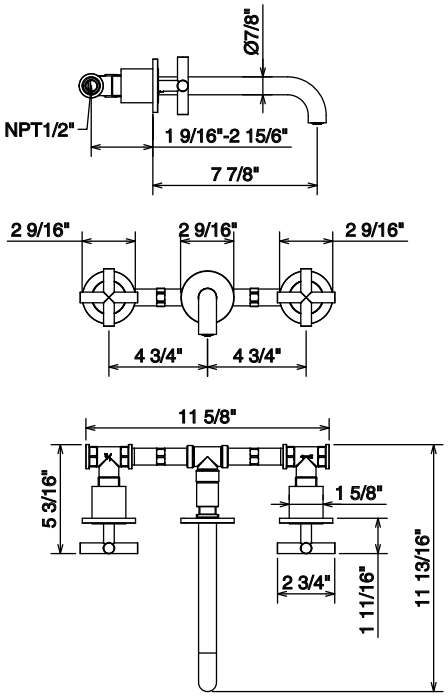

14601 CR CS

SINGLE HOLE LAVATORY MIXER WITH POP-UP WASTE
MELANGEUR MONOTROU AVEC BEC HAUT ET VIDAGE

PC	**$740**	**BN**	**$1035**
BL	**$1035**	**WH**	**$1035**

14601 CR TC

SINGLE HOLE LAVATORY MIXER WITHOUT POP-UP WASTE
MELANGEUR MONOTROU AVEC BEC HAUT, SANS VIDAGE

PC	**$695**	**BN**	**$970**
BL	**$970**	**WH**	**$970**

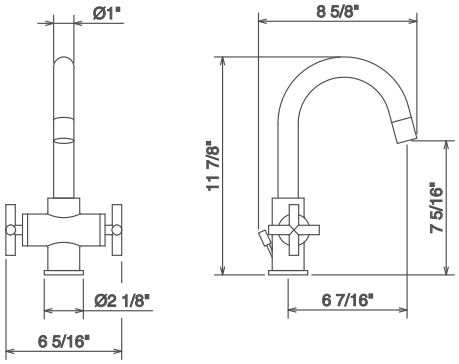

METRÒ

[comfort zone]
aromasoul rituals
hair energizer
concentrate

32001 CS

LAVATORY FAUCET WITH POP-UP WASTE WITH AERATOR
LAVABO AVEC VIDAGE, AVEC AERATEUR

PC **$345**

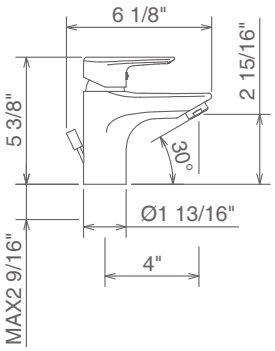

32001 TC

LAVATORY FAUCET WITHOUT POP-UP WASTE WITH AERATOR
LAVABO SANS VIDAGE AVEC AERATEUR

PC **$295**

32200 TC

WALL MOUNTED LAVATORY SET WITHOUT POP-UP WASTE
MITIGEUR LAVABO À PAROIE SANS VIDAGE

PC **$455**

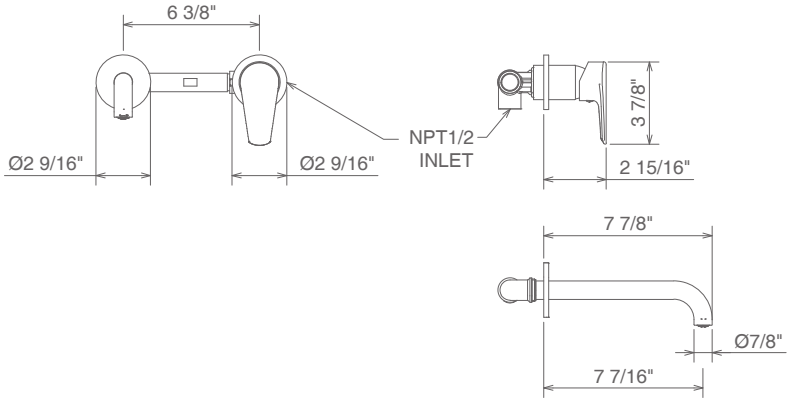

NEWPRO

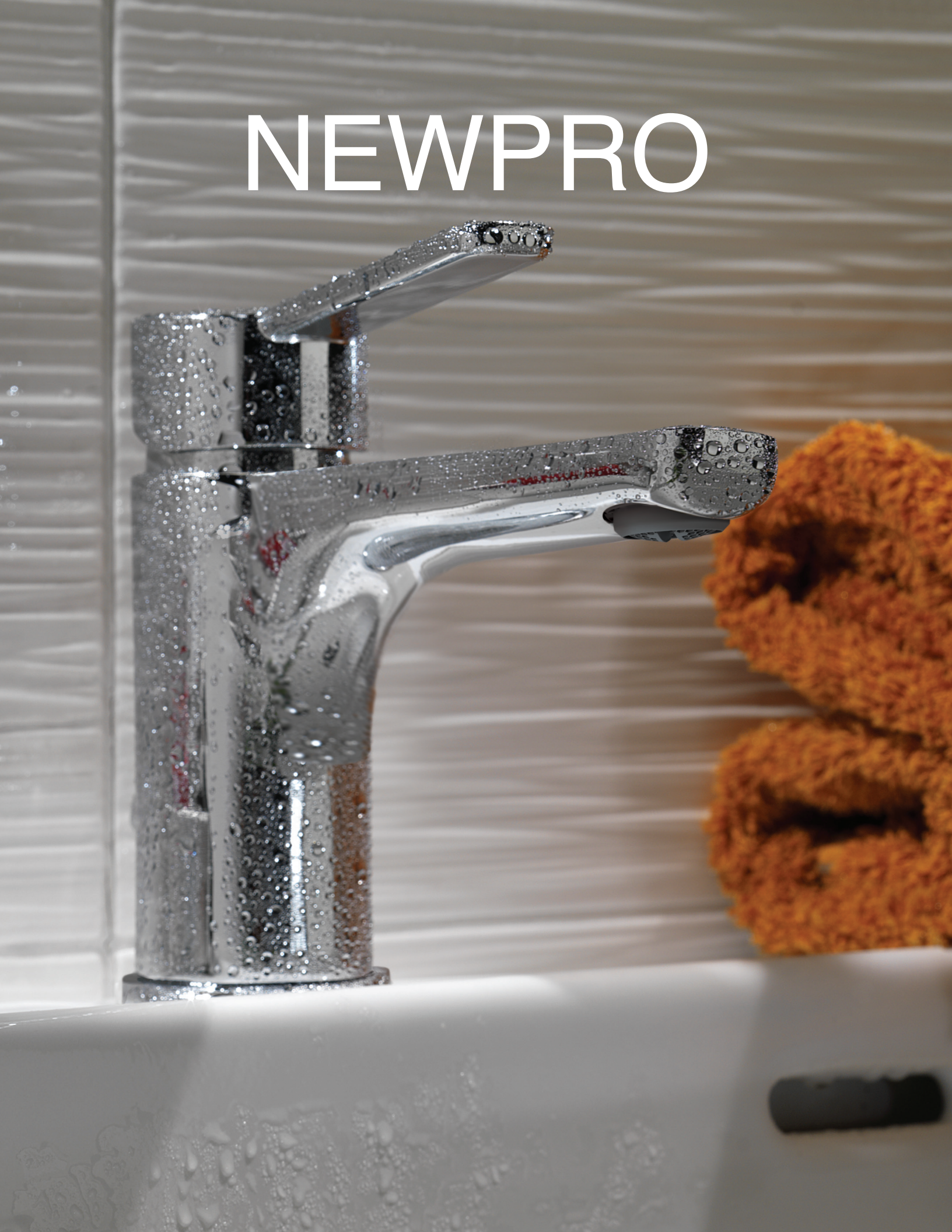

42008 CS XL

LAVATORY FAUCET WITH POP-UP WASTE WITH AERATOR
LAVABO AVEC VIDAGE, AVEC AERATEUR

PC $290

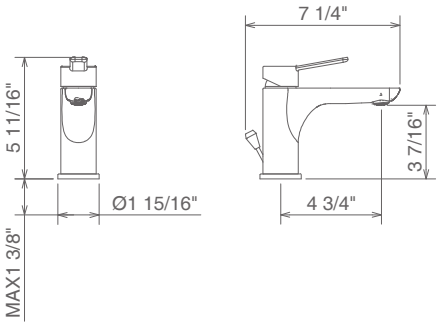

42008 TC XL

LAVATORY FAUCET WITHOUT POP-UP WASTE WITH AERATOR
LAVABO SANS VIDAGE AVEC AERATEUR

PC $275

42002 CS

LAVATORY FAUCET WITH AERATOR, ABS (*) WASTE
MITIGEUR LAVABO AVEC VIDAGE EN ABS (*)

PC $265

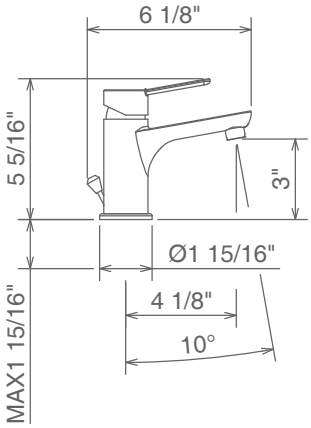

42002 TC

LAVATORY FAUCET WITHOUT POP-UP WASTE
LAVABO SANS VIDAGE

PC $250

(*) ON REQUEST METAL POP-UP WASTE

42150 T

TRIM FOR PRESSURE BALANCE SHOWER MIXER
PARTIE EXTERIEURE POUR PRESSURE BALANCE

PC $270

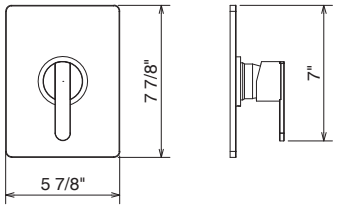

50697 VOL CR

ONLY BUILT-IN BODY VOLUME CONTROL PRESSURE BALANCE SHOWER MIXER
MITIGEUR DOUCHE ENCASTRER PRESSURE BALANCED À CONTROL VOLUME - SEULEMENT CORPS

$380

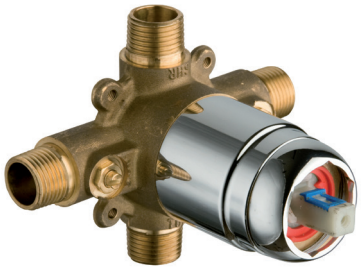

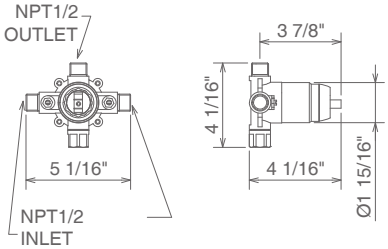

42150 R T

TRIM FOR PRESSURE BALANCE WITH DIVERTER
PARTIE EXTERIEURE POUR PRESSURE BALANCE AVEC ENVERSEUR

PC $290

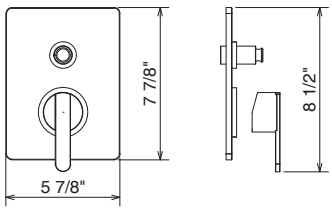

50797 VOL CR

ONLY BUILT-IN BODY VOLUME CONTROL PRESSURE BALANCE SHOWER MIXER WITH DIVERTER
MITIGEUR DOUCHE PRESSURE BALANCED ENCASTRER À CONTROL VOLUME AVEC ENVERSEUR - SEULEMENT CORPS

$530

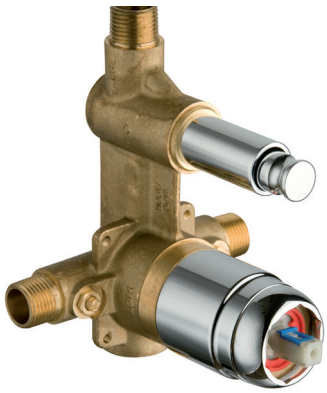

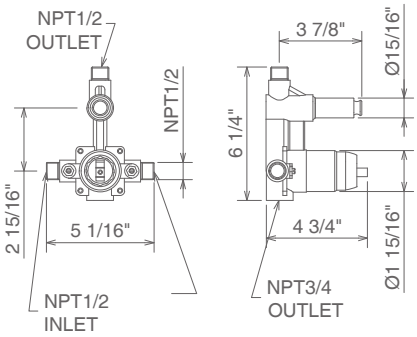

INDICATES IN STOCK

25001 CS

WIDESPREAD LAVATORY SET WITH POP-UP WASTE
MALANGEUR LAVABO 3 TROUS AVEC VIDAGE

PC $1025 BN $1435
PG $1845

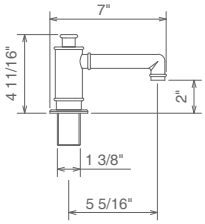

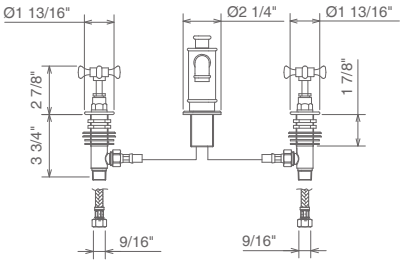

25200 TC

WALL MOUNTED LAVATORY SET WITHOUT POP-UP WASTE
MITIGEUR LAVABO À PAROIE SANS VIDAGE

PC $815 BN $1140
PG $1465

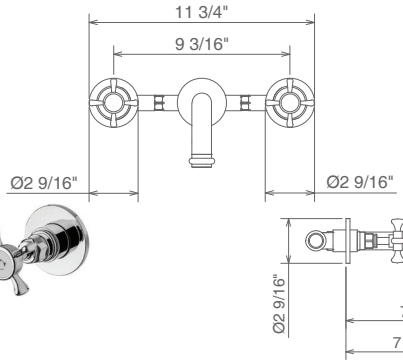

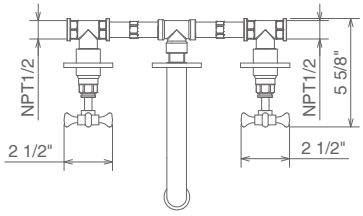

25501 CS

SINGLE HOLE LAVATORY MIXER WITH POP-UP WASTE
MÉLANGEUR MONOTROU AVEC VIDAGE

PC $840 BN $1170
PG $1510

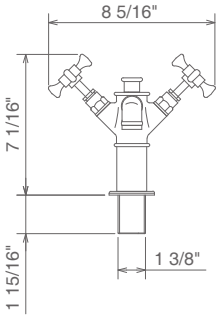

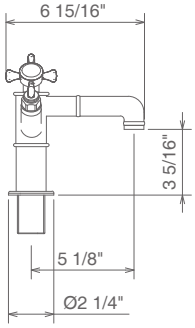

25950

3/4 CONCEALED THERMOSTATIC VALVE WITH VOLUME CONTROL + 1/2 REDUCTION KIT
THERMOSTATIQUE À ENCASTRER AVEC ARRET, 3/4 AVEC KIT REDUCTION 1/2

PC $1570 BN $2195
PG $2820

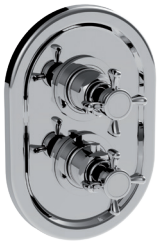

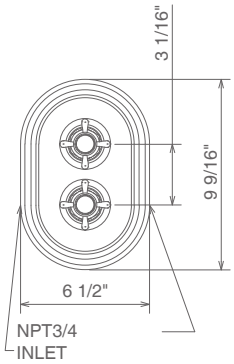

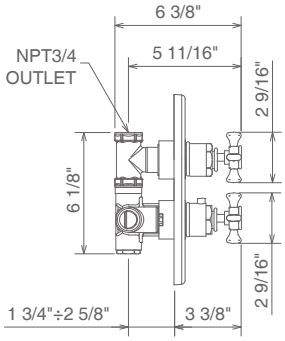

25950 R2

3/4 CONCEALED THERMOSTATIC VALVE WITH 2 ALTERNATIVE EXITS + 1/2 REDUCTION KIT
1 FUNCTION AT A TIME
THERMOSTATIQUE À ENCASTRER AVEC 2 SORTIES ALTERNATIVES, 3/4 AVEC KIT REDUCTION 1/2

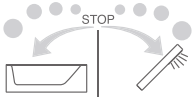

PC $1775 BN $2485
PG $3195

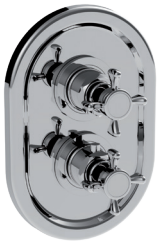

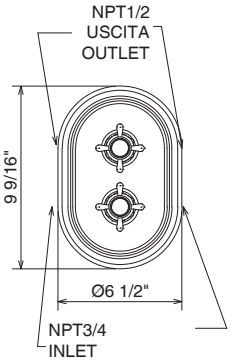

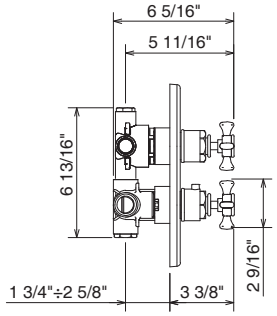

INDICATES IN STOCK

25950 R3

3/4 CONCEALED THERMOSTATIC VALVE WITH 3 ALTERNATIVE EXITS + 1/2 REDUCTION KIT
1 FUNCTION AT A TIME
THERMOSTATIQUE À ENCASTRER AVEC 3 SORTIES ALTERNATIVES, 3/4 AVEC KIT REDUCTION 1/2

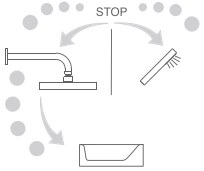

PC $1795 BN $2525
PG $3250

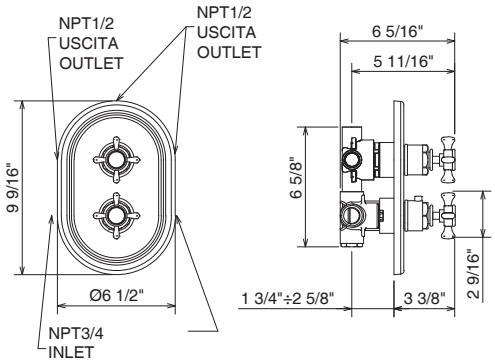

25062 3/4

3/4 CONCEALED THERMOSTATIC SHUT OFF VALVE
THERMOSTATIQUE À ENCASTRER ARRET 3/4

PC $295 BN $410
PG $525

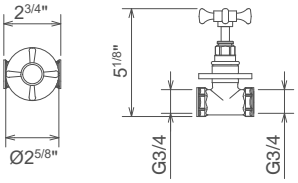

25019/180

EXTERNAL BATH MIXER WITHOUT ADJUSTABLE SHOWER BRACKET (180 mm CENTRE TO CENTRE DISTANCE)
MELANGEUR POUR BAGNOIRE SANS DUPLEX (DISTANCE ENTRÉE MURALES 180 mm)

PC $1730 BN $2420
PG $3095

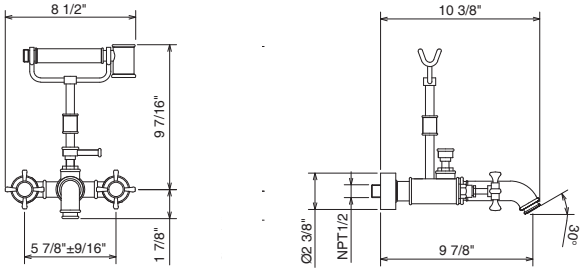

25026/180

DECK MOUNTED BATH MIXER WITH SHOWER SET (180 mm CENTRE TO CENTRE DISTANCE)
MELANGEUR POUR BAGNOIRE SUR PLAN (DISTANCE TROUS 180 mm)

PC $1730 BN $2420
PG $3095

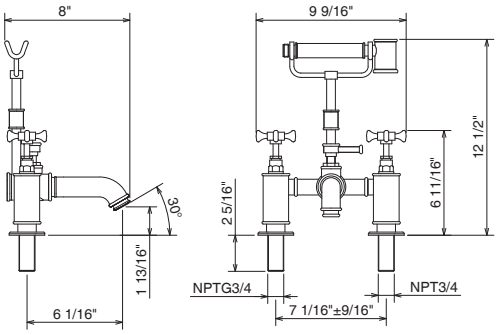

25029

FLOOR MOUNTED BATH MIXER
MELANGEUR POUR BAGNOIRE SUR COLONNES

PC $3375 BN $4725
PG $5995

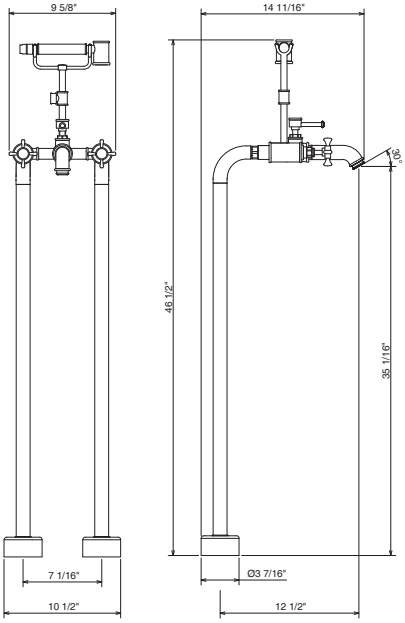

VICTORIA III

PC CHROME **BN** BRUSHED NICKEL **PG** GOLD

25001 LE CS

WIDESPREAD LAVATORY SET WITH POP-UP WASTE
MALANGEUR LAVABO 3 TROUS AVEC VIDAGE

PC $1025 BN $1435
PG $1845

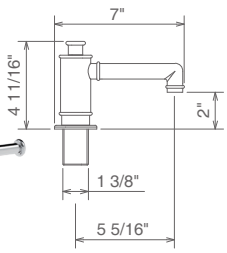

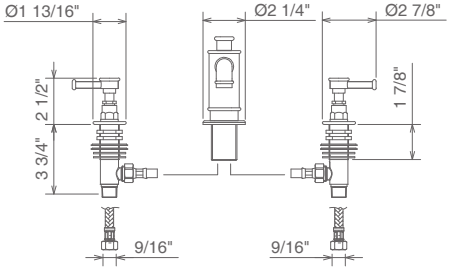

25200 LE TC

WALL MOUNTED TUB SPOUT WITH AERATOR
BEC MURAL POUR BAIGNOIRE AVEC AERATEUR

PC $815 BN $1140
PG $1465

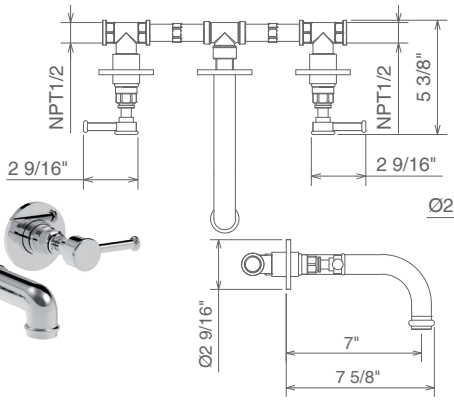

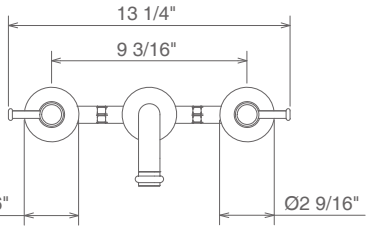

25501 LE CS

SINGLE HOLE LAVATORY MIXER WITH POP-UP
MÉLANGEUR MONOTROU AVEC VIDAGE

PC $840 BN $1170
PG $1510

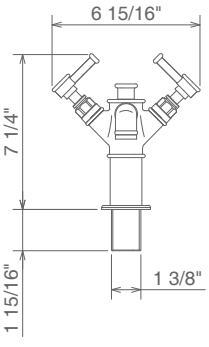

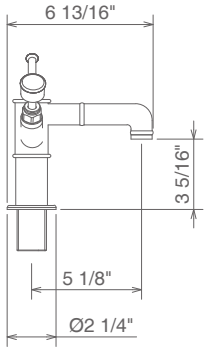

25950 LE

3/4 CONCEALED THERMOSTATIC VALVE WITH VOLUME CONTROL + 1/2 REDUCTION KIT
THERMOSTATIQUE À ENCASTRER AVEC ARRET, 3/4 AVEC KIT REDUCTION 1/2

PC $1550 BN $2170
PG $2790

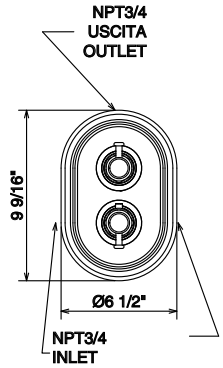

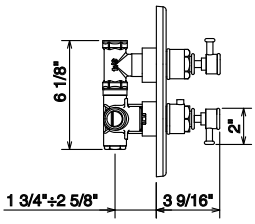

25950 R2 LE

3/4 CONCEALED THERMOSTATIC VALVE WITH 2 ALTERNATIVE EXITS + 1/2 REDUCTION KIT
THERMOSTATIQUE À ENCASTRER AVEC 2 SORTIES ALTERNATIVES, 3/4 AVEC KIT REDUCTION 1/2

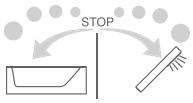

PC $1760 BN $2460
PG $3165

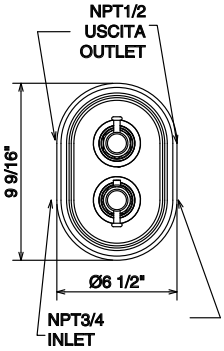

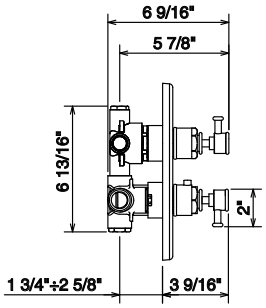

INDICATES IN STOCK

25950 R3 LE

3/4 CONCEALED THERMOSTATIC VALVE WITH 3 ALTERNATIVE EXITS + 1/2 REDUCTION KIT
THERMOSTATIQUE À ENCASTRER AVEC 3 SORTIES ALTERNATIVES, 3/4 AVEC KIT REDUCTION 1/2

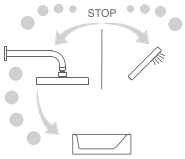

PC $1785 BN $2495
PG $3215

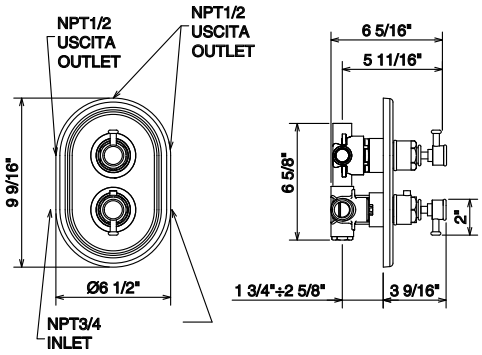

25062 3/4 LE

3/4 CONCEALED THERMOSTATIC SHUT OFF VALVE
THERMOSTATIQUE À ENCASTRER ARRET 3/4

PC $295 BN $410
PG $525

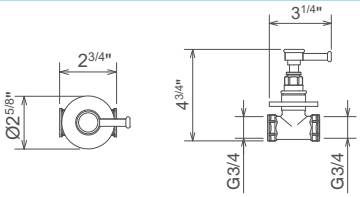

25019/180 LE

EXTERNAL BATH MIXER WITHOUT ADJUSTABLE SHOWER BRACKET (180 mm CENTRE TO CENTRE DISTANCE)
MELANGEUR POUR BAGNOIRE SANS DUPLEX (DISTANCE ENTRÉE MURALES 180 mm)

PC $1730 BN $2420
PG $3095

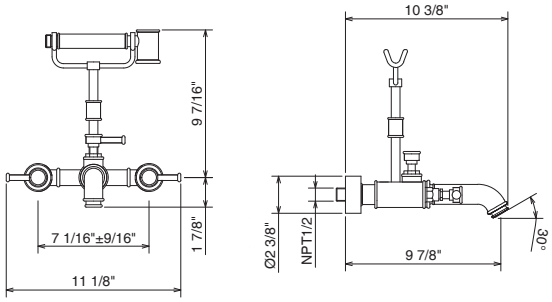

25026/180 LE

DECK MOUNTED BATH MIXER WITH SHOWER SET (180 mm CENTRE TO CENTRE DISTANCE)
MELANGEUR POUR BAGNOIRE SUR PLAN (DISTANCE TROUS 180 mm)

PC $1730 BN $2420
PG $3095

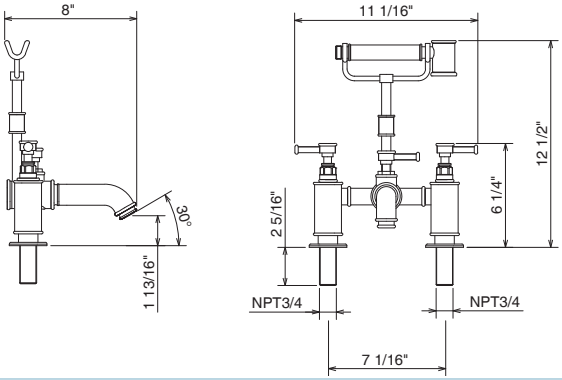

25029 LE

FLOOR MOUNTED BATH MIXER
MELANGEUR POUR BAGNOIRE SUR COLONNES

PC $3375 BN $4725
PG $5995

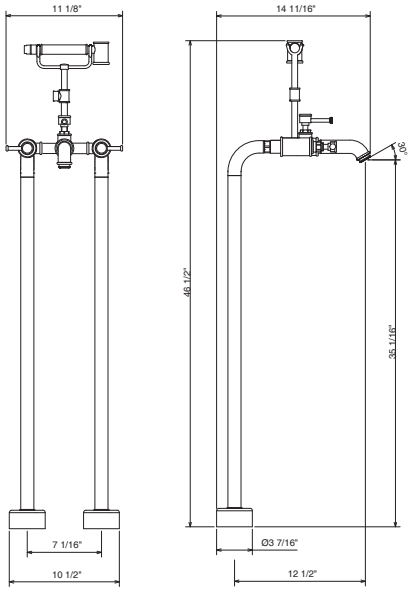

INC 950

3/4 ONLY BUILT-IN BODY CONCEALED THERMOSTATIC VALVE WITH VOLUME CONTROL + 1/2 REDUCTION KIT
THERMOSTATIQUE À ENCASTRER AVEC ARRET, 3/4 AVEC KIT REDUCTION 1/2 - SEULEMENT CORPS

$850

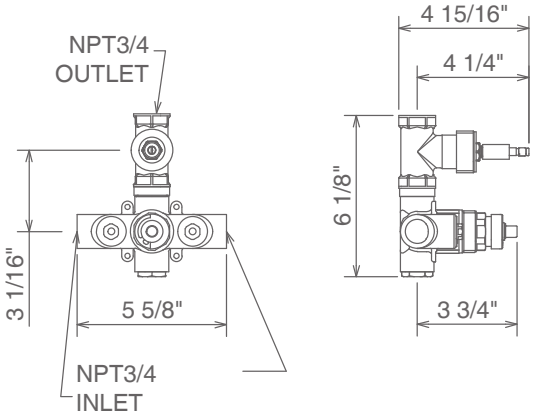

INC 955

3/4 ONLY BUILT-IN BODY CONCEALED THERMOSTATIC VALVE+ 1/2 REDUCTION KIT
THERMOSTATIQUE À ENCASTRER 3/4 AVEC KIT REDUCTION 1/2 - SEULEMENT CORPS

$600

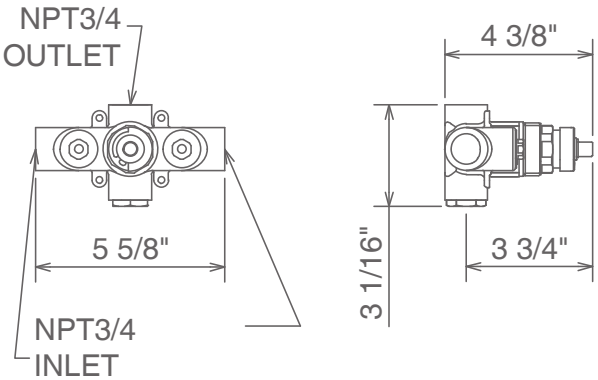

INC 950 R2

3/4 ONLY BUILT-IN BODY CONCEALED THERMOSTATIC VALVE WITH 2 OUTLET DIVERTER + REDUCTION KIT. 1 FUNCTION AT A TIME
THERMOSTATIQUE À ENCASTRER, AVEC 2 SORTIES - KIT REDUCTION 1/2 - SEULEMENT CORPS

$1055

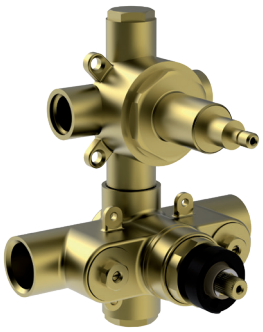

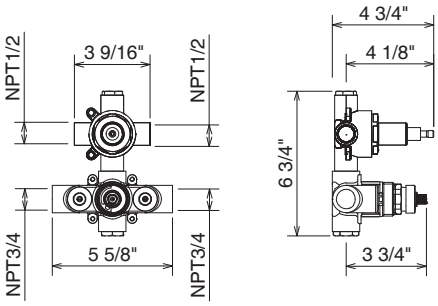

INC 950 R3

3/4 ONLY BUILT-IN BODY CONCEALED THERMOSTATIC VALVE WITH 3 OUTLET DIVERTER + REDUCTION KIT. 1 FUNCTION AT A TIME
THERMOSTATIQUE À ENCASTRER, AVEC 3 SORTIES - KIT REDUCTION 1/2 - SEULEMENT CORPS

$1085

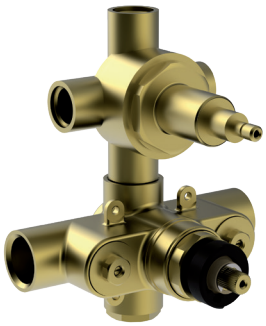

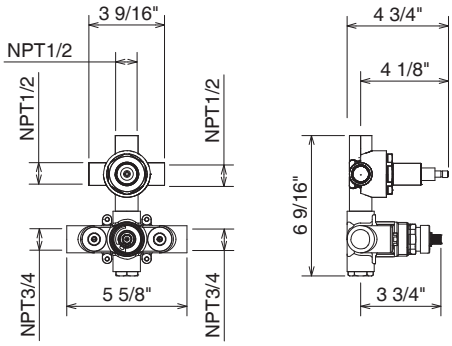

SOFF LEO COMPL

SHOWER HEAD WITH WALL ARM
DOUCHE AVEC BRAS À PAROI

PC $595 BN $830
PG $1065

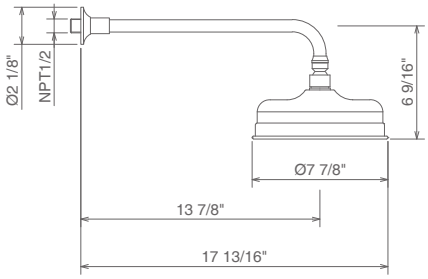

00080

LAGHI SHOWER HEAD WITH WALL ARM
DOUCHE LAGHI AVEC BRAS À PAROI

PC $740

CHROME SHOWERHEAD & ARM

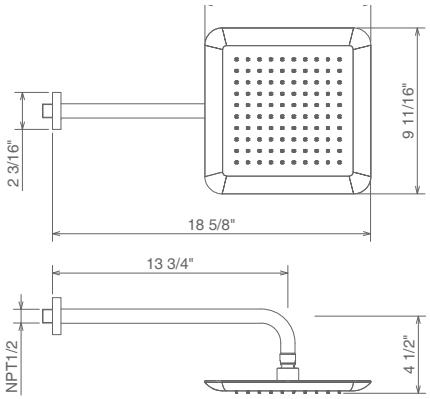

SHOWERHEAD IN OTHER FINISHES

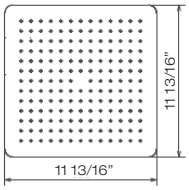

1Z301 + 710350

LAGHI SHOWER HEAD WITH WALL ARM
DOUCHE LAGHI AVEC BRAS À PAROI

BN $1455 BL $1455
WH $1455 PG $2095

7112001

ROUND 8″ CEILING ARM
BRAS DE DOUCHE DE PLAFOND 8″

PC $170 BN $185
BL $185 WH $185
PG $270

85012

FULL BRASS SLIDING BAR WITH SHOWER SET
BARRE DOUCHE IN LAITON AVEC DOUCHETTE, FLEXIBLE IT D'EAU

PC $580 BN $815
BL $815 WH $815
PG $1110

HANDSHOWER USED FOR BN, BL, WH, PG

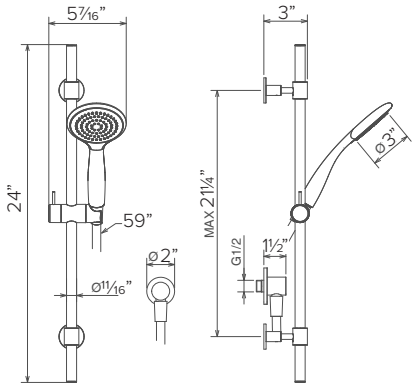

SALI VIK COMPL

COMPLETE SLIDING BAR WITH WALL OUTLET & SHOWER SET
BARRE DOUCHE COMPLETE

PC $745 BN $1045
PG $1315

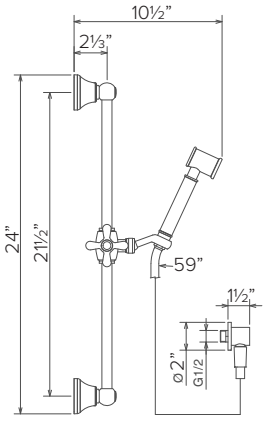

KITCHEN

40481 DUAL

TALL SINK MIXER WITH SPRING AND DUAL FUNCTION SPRAY
MITIGEUR POUR ÉVIER AVEC DOUCHETTE RESSORT DOUBLE JET

PC $995 BN $1390

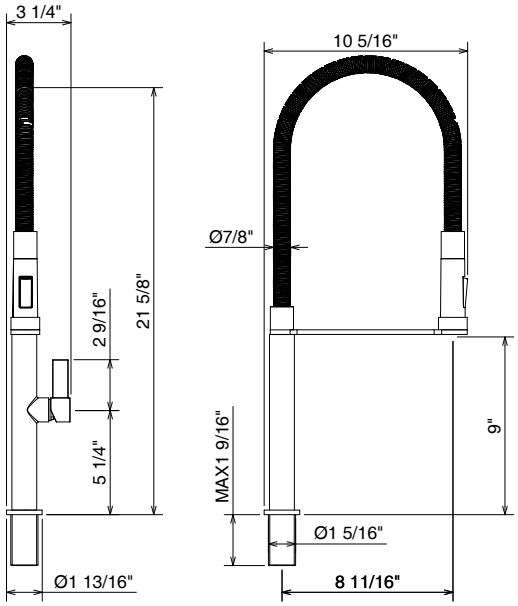

40481

TALL SINK MIXER WITH SPRING AND SINGLE FUNCTION SPRAY
MITIGEUR POUR ÉVIER AVEC DOUCHETTE RESSORT

PC $910 BN $1270

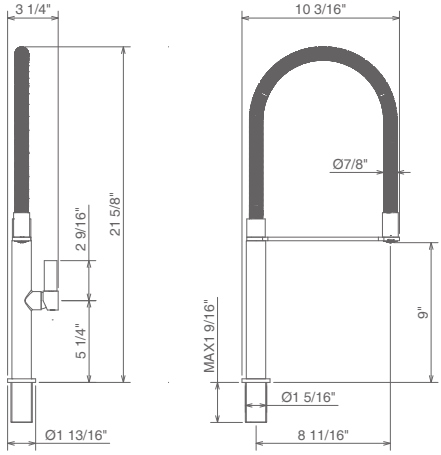

40681

TALL SINK MIXER WITH SPRING AND SINGLE FUNCTION SPRAY
MITIGEUR POUR ÉVIER AVEC DOUCHETTE RESSORT

PC $865 BN $1195

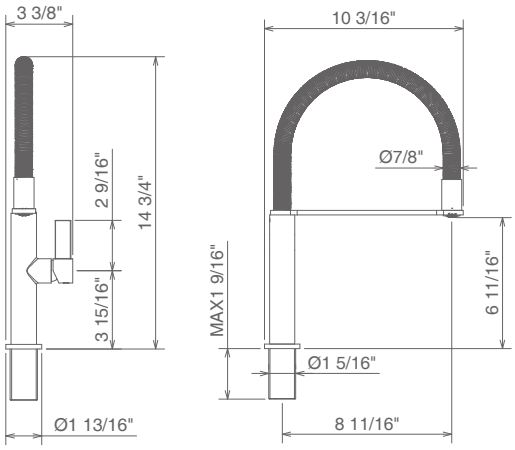

40813 U

SINK MIXER WITH SWIVEL SPOUT
MITIGEUR POUR ÉVIER AVEC BEC ORIENTABLE

PC $670 BN $935

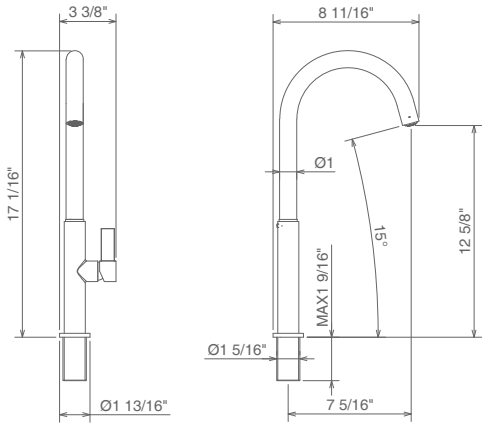

40781 DUAL

SINK MIXER WITH PULL-DOWN DUAL SPRAY
MITIGEUR POUR ÉVIER AVEC DOUCHETTE EXTRACTABLE DOUBLE JET

PC $875 BN $1225

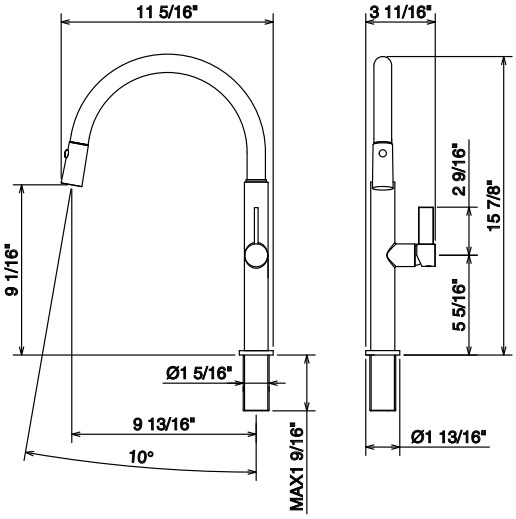

40781

SINK MIXER WITH PULL-DOWN SPRAY
MITIGEUR POUR ÉVIER AVEC DOUCHETTE EXTRACTABLE

PC $790 BN $1095

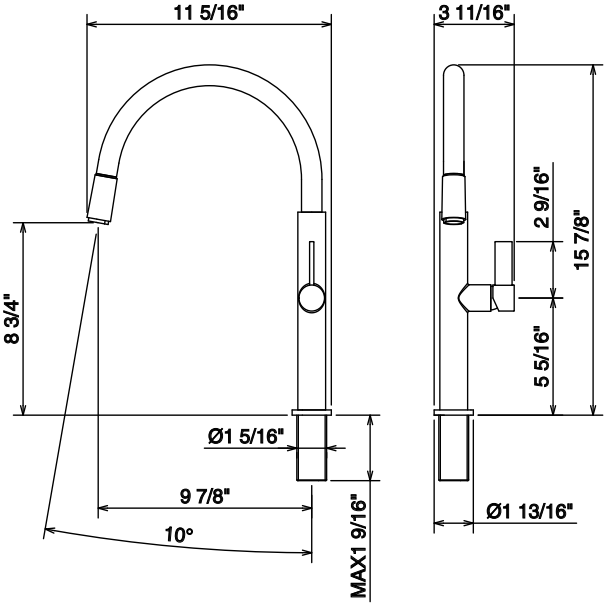

INDICATES IN STOCK

34730

SINGLE LEVER SINK MIXER WITH SEPARATE PULL-DOWN SPOUT
MITIGEUR POUR ÉVIER AVEC BEC TÉLÉSCOPIQUE

PC $880 BN $1230

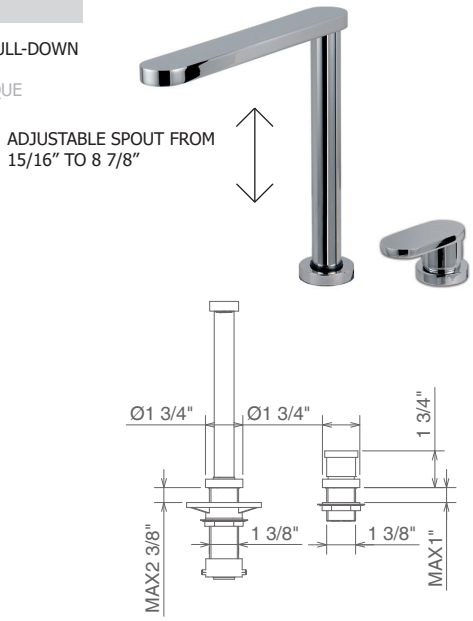

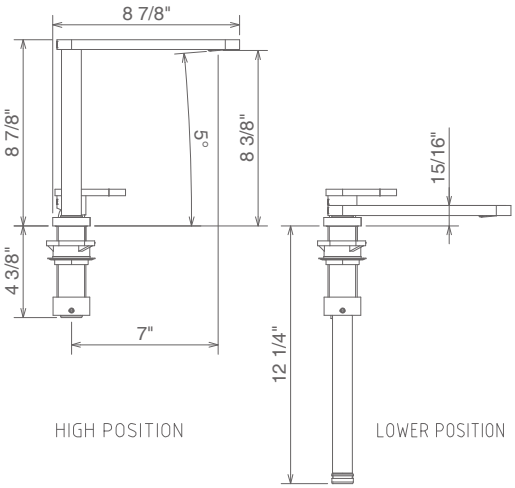

28813

SINK MIXER WITH 90° HIGH SPOUT
MITIGEUR POUR ÉVIER AVEC BEC ORIENTABLE

PC $740 BN $1035
GR $960

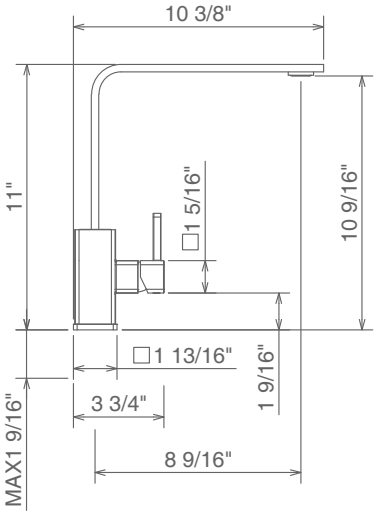

28881

SINK MIXER WITH 90° HIGH SPOUT AND PULL-OUT SPRAY
MITIGEUR POUR ÉVIER AVEC DOUCHETTE EXTRACTABLE

PC $925 BN $1295
GR $1195

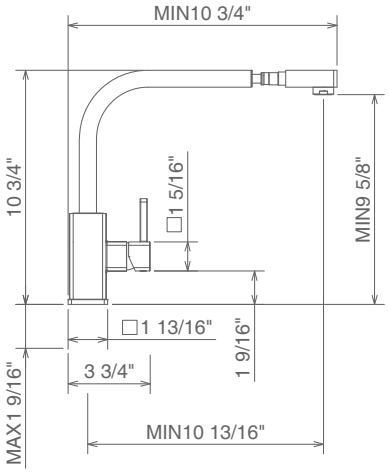

26713

SINGLE LEVER SINK MIXER WITH HIGH SPOUT
MITIGEUR POUR ÉVIER AVEC BEC ORIENTABLE

PC $755 BN $1060

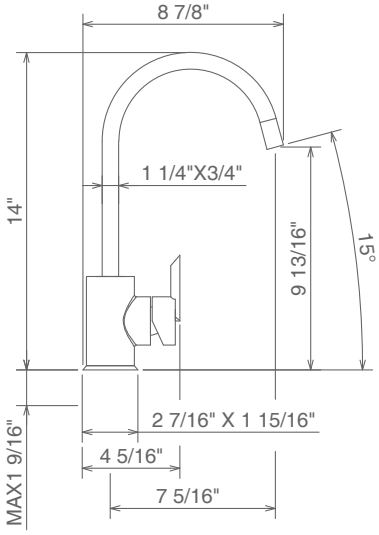

17781

SINK MIXER WITH PULL-DOWN SPRAY
MITIGEUR POUR ÉVIER AVEC DOUCHETTE EXTRACTABLE

PC $735 BN $995

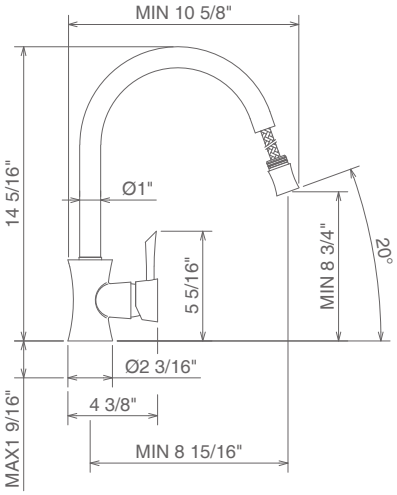

17081

SINK MIXER WITH PULL-OUT SHOWER
MITIGEUR POUR ÉVIER AVEC DOUCHETTE EXTRACTABLE

PC $745 BN $1045

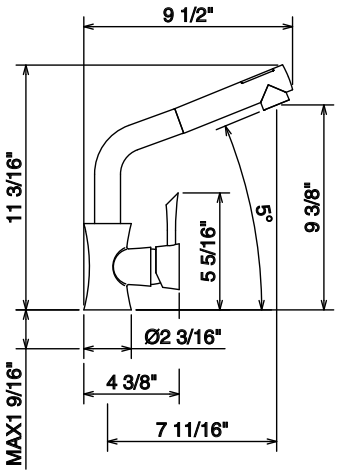

INDICATES IN STOCK

12481

SINK MIXER WITH SPRING SPOUT AND PULL-DOWN SPRAY
MITIGEUR POUR ÉVIER AVEC DOUCHETTE RESSORT

PC $1050 BN $1465

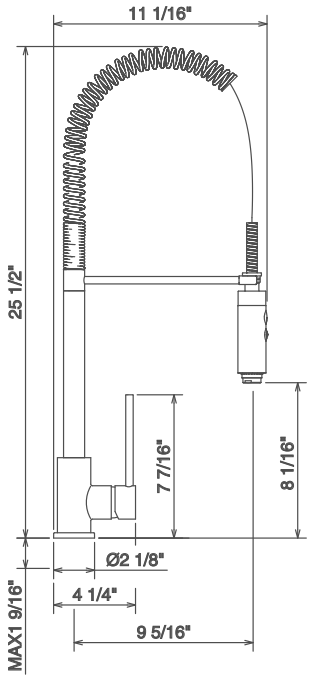

12781

SINK MIXER WITH PULL-DOWN SPRAY
MITIGEUR POUR ÉVIER AVEC DOUCHETTE EXTRACTABLE

PC $690 BN $965

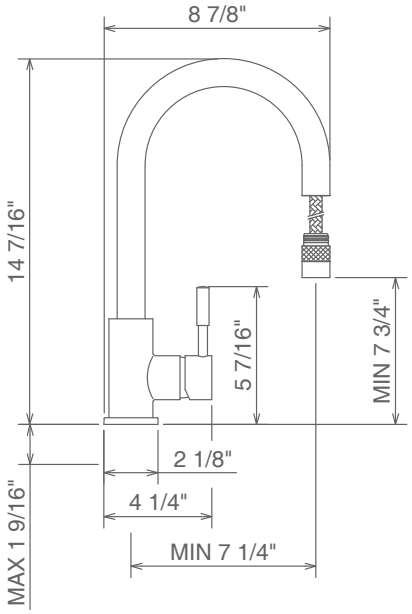

12081

SINK MIXER WITH PULL-OUT SHOWER
MITIGEUR POUR ÉVIER AVEC DOUCHETTE EXTRACTABLE

PC $640 BN $895

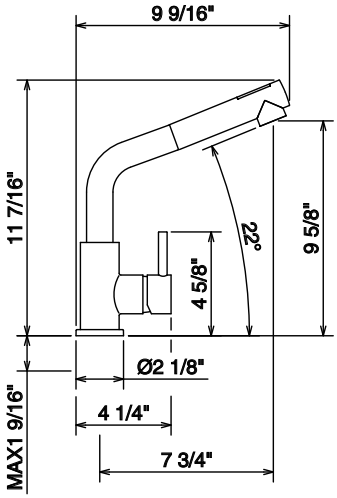

12713

SINK MIXER WITH HIGH SPOUT
MITIGEUR POUR ÉVIER AVEC BEC ORIENTABLE

PC $560 BN $780

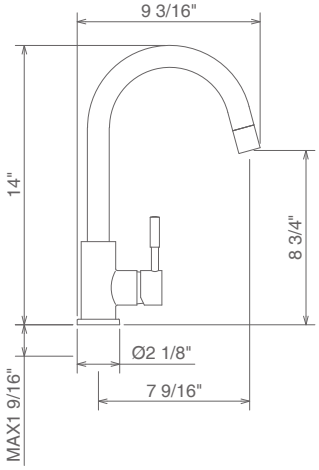

14081 CR

2 HANDELS SINK MIXER WITH PULL-OUT SHOWER
MÉLANGEUR DEUX POIGNÉES POUR EVIER, DOUCHETTE EXTRACTABLE

PC $840 BN $1175

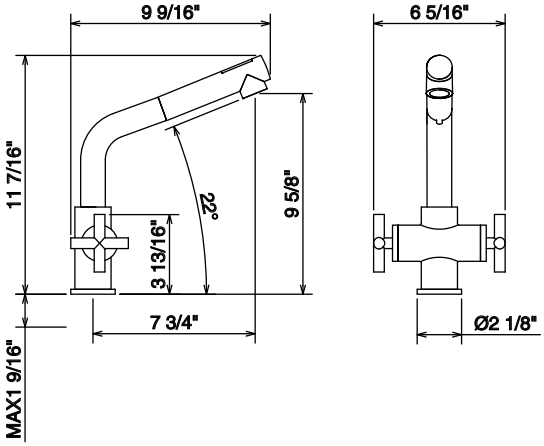

14081 TO

2 HANDELS SINK MIXER WITH PULL-OUT SHOWER
MÉLANGEUR DEUX POIGNÉES POUR EVIER, DOUCHETTE EXTRACTABLE

PC $840 BN $1175

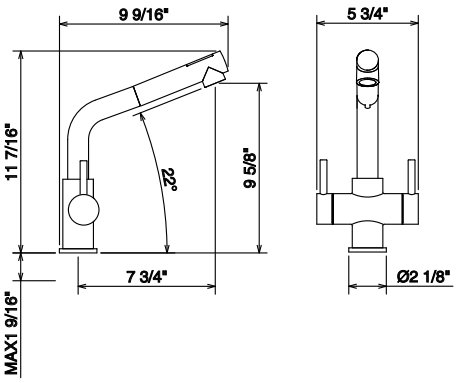

INDICATES IN STOCK

14781 CR

2 HANDELS SINK MIXER WITH PULL-DOWN SPRAY
MÉLANGEUR DEUX POIGNÉES POUR EVIER, DOUCHETTE EXTRACTABLE

PC **$870** **BN** **$1215**

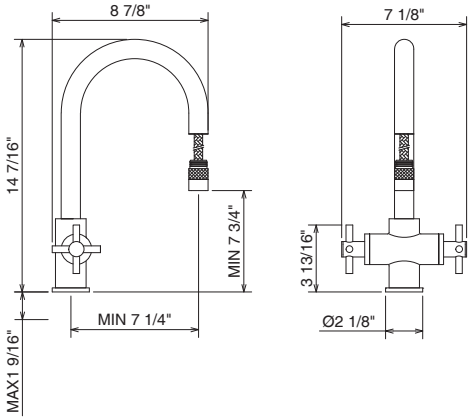

14781 TO

2 HANDELS SINK MIXER WITH PULL-DOWN SPRAY
MÉLANGEUR DEUX POIGNÉES POUR EVIER, DOUCHETTE EXTRACTABLE

PC **$870** **BN** **$1215**

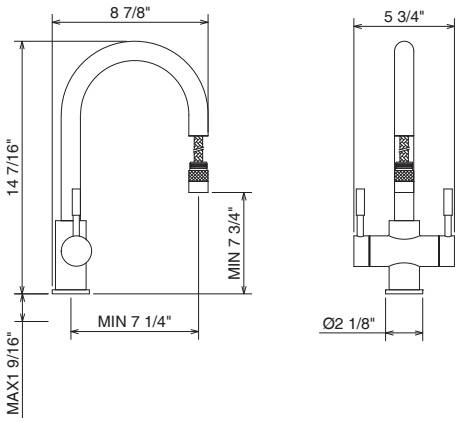

42181

SINK MIXER WITH PULL-OUT SHOWER
MITIGEUR POUR ÉVIER AVEC DOUCHETTE EXTRACTABLE

PC **$425**

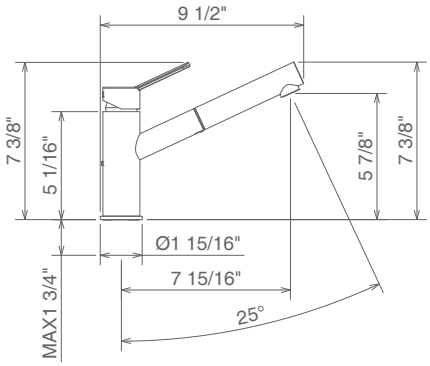

2022 PRICE LIST

CANADA

Designer Brands for Kitchen & Bath
streamline
CANADA

ORDERS@STREAMLINECANADA.CA

U.S.A.

Aloré Design

ORDERDESK@ALOREDESIGN.COM

1-866-503-9796