HORUS

KITCHEN

KITCHEN MIXER WITH SWIVEL SPOUT

102.81.723

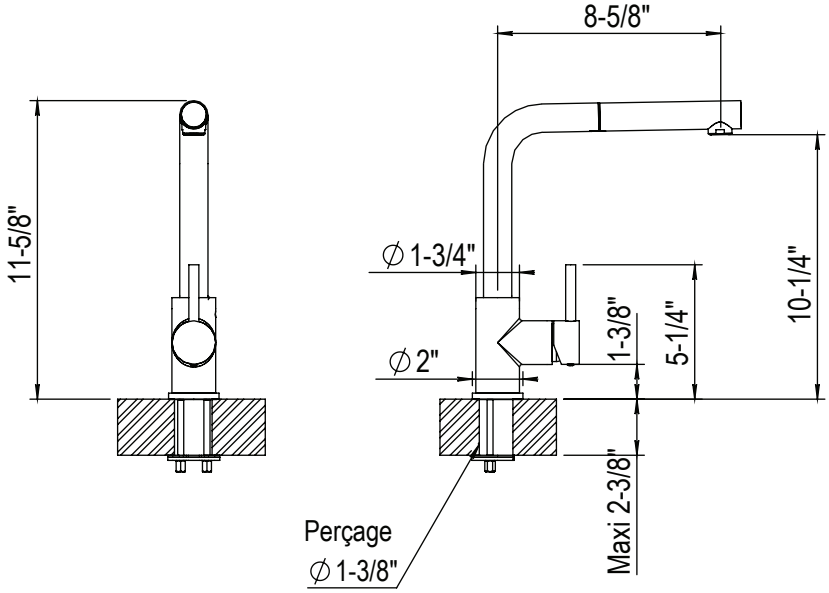

- Cartridge: HOP7180BT

SPECIALTY PVD FINISHES

COP Pink Copper

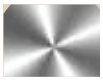

SS Stainless Steel

BG Brushed Gold

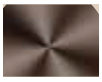

GM Gun Metal