HORUS

# 1/2” THREE WAY DIVERTER WITH NO SHARED PORT

**100.92.090BT**

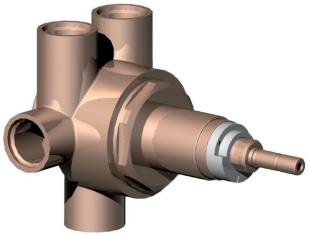

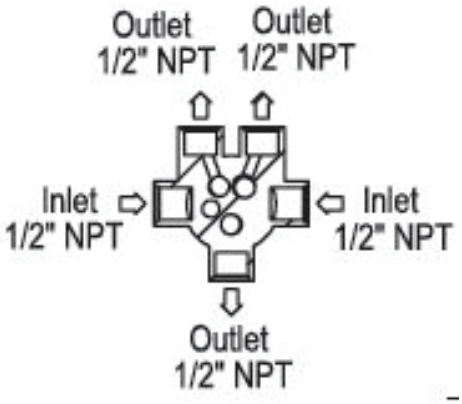


## FEATURES

- 5 Way concealed Diverter
- 2 Inlets / 3 Outlets
- Must Order Volume Control Trim

---

### STANDARD FINISHES

**PC** Chrome
**PN** Polished Nickel
**BN** Brushed Nickel

### SPECIALTY FINISHES

#### GLOSSY FINISHES

**GB** Golden Brass
**PS** Polished Silver
**PG** Polished Gold
**UB** Unlacquered Brass

#### MATTE FINISHES

**AB** Antique Brass
**CB** Cannon Bronze
**AS** Antique Silver
**MG** Matte Gold