HORUS

SHOWER COMPONENTS

ANGLED SHOWER ARM

100.92.507

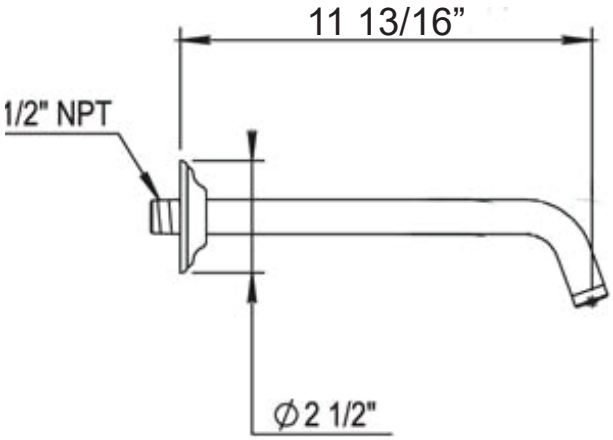

STANDARD FINISHES

PC Chrome

PN Polished Nickel

BN Brushed Nickel

SPECIALTY FINISHES

GLOSSY FINISHES

GB Golden Brass

PS Polished Silver

PG Polished Gold

UB Unlacquered Brass

MATTE FINISHES

AB Antique Brass

CB Cannon Bronze

AS Antique Silver

MG Matte Gold