HORUS

NEW WAVE
2 HOLE DECK TUB FILLER

100.40.766

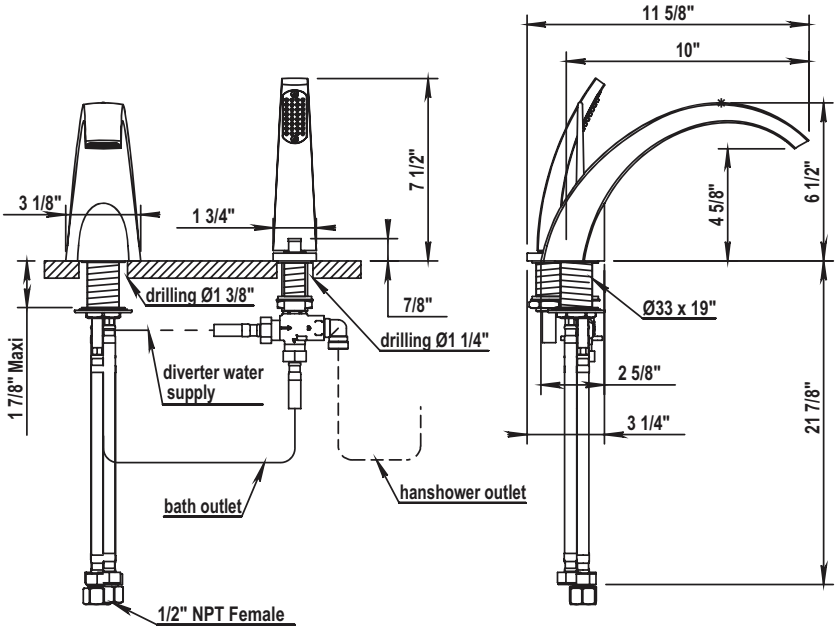

- Cartridge: HOP92.827BT

STANDARD FINISHES

PC Chrome

NC Black Chrome

SPECIALTY FINISHES

SC Satin Copper

SG Satin Gold

GM Gun Metal

SN Satin Nickel

PVD FINISHES

CHPVD Champagne

PIPVD Pink

BLPVD Glossy Black