HORUS

ECHO
EXPOSED THERMOSTATIC WALLMOUNT TUB FILLER

100.43.714

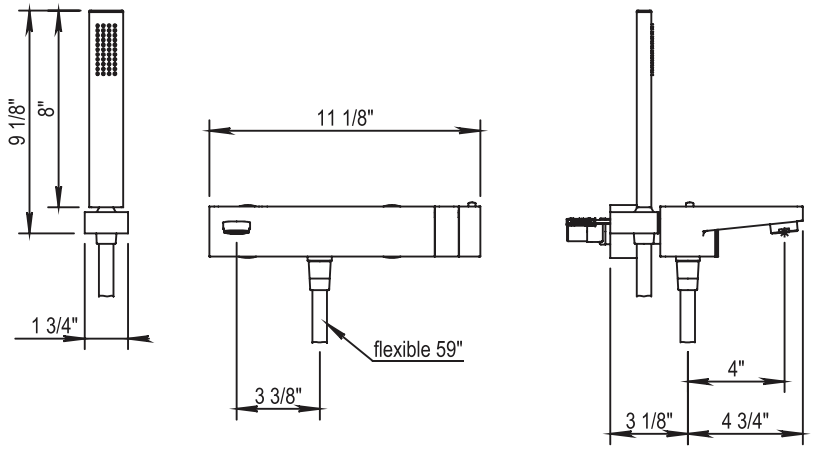

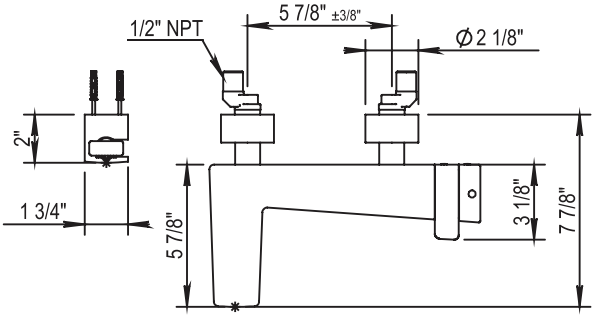

- Cartridge: HOP6015BT

STANDARD FINISHES

PC Chrome

SPECIALTY FINISHES

SC Satin Copper

SG Satin Gold

GM Gun Metal

SN Satin Nickel

MB Matte Black