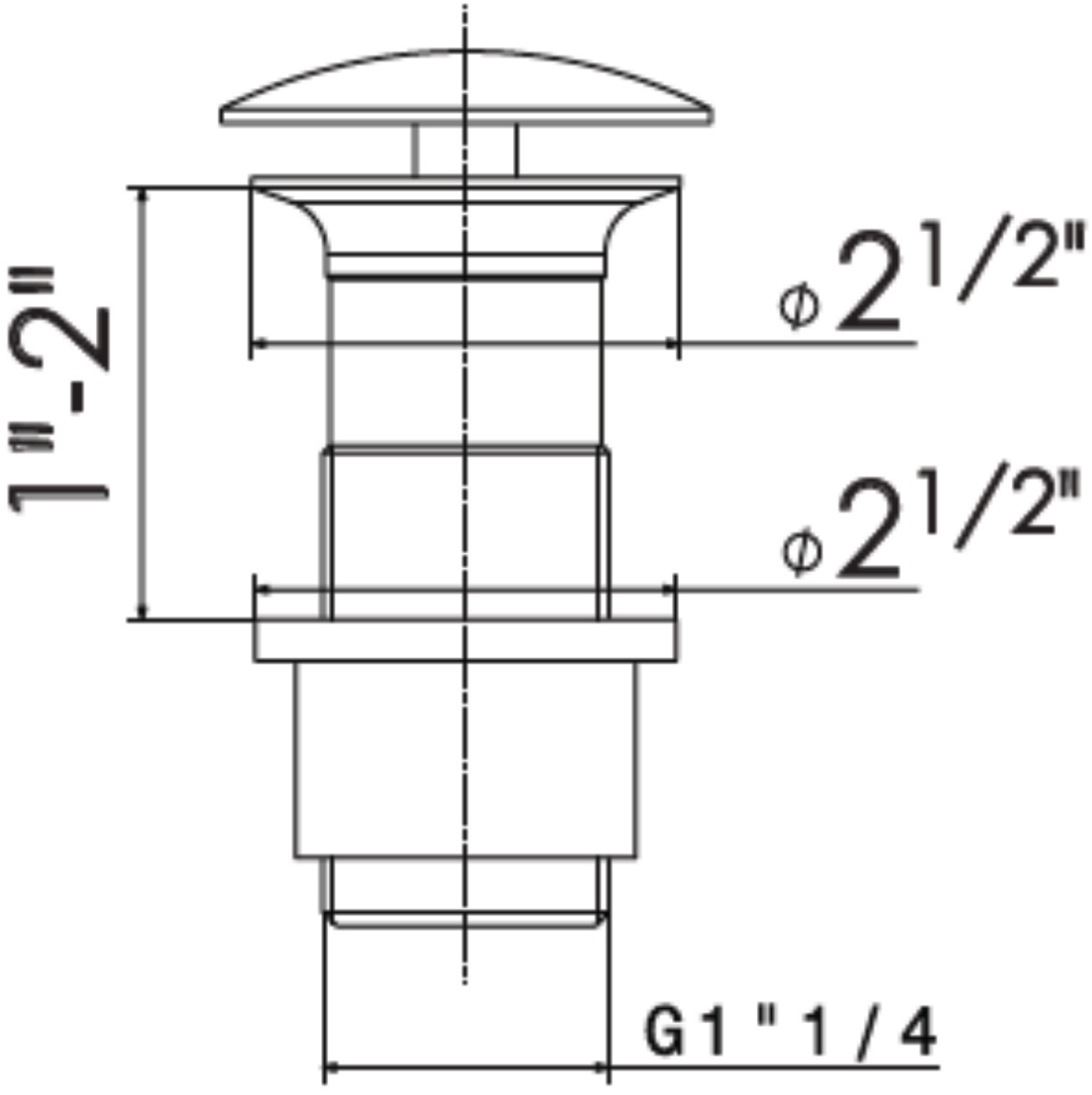
1"-2"
ϕ2 1/2"
ϕ2 1/2"
G1 " 1 / 4