newform

REAL STEEL
KITCHEN MIXER WITH DUAL SPRAY
63425X

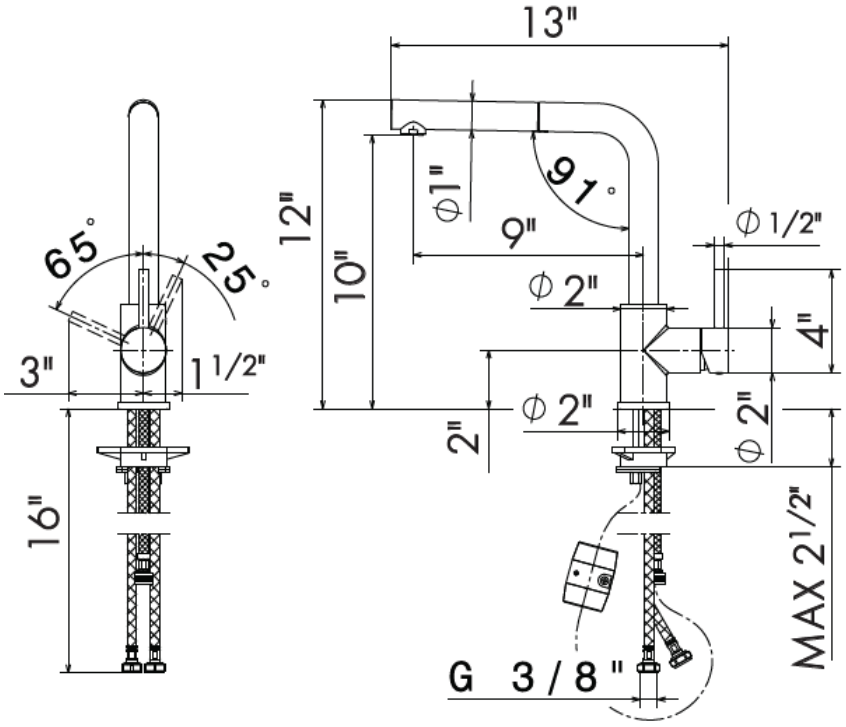

- Cartridge: 14720.00.000

AVAILABLE FINISHES

50.050
STAINLESS STEEL

newform

REAL STEEL
KITCHEN MIXER WITH DUAL SPRAY
63425X
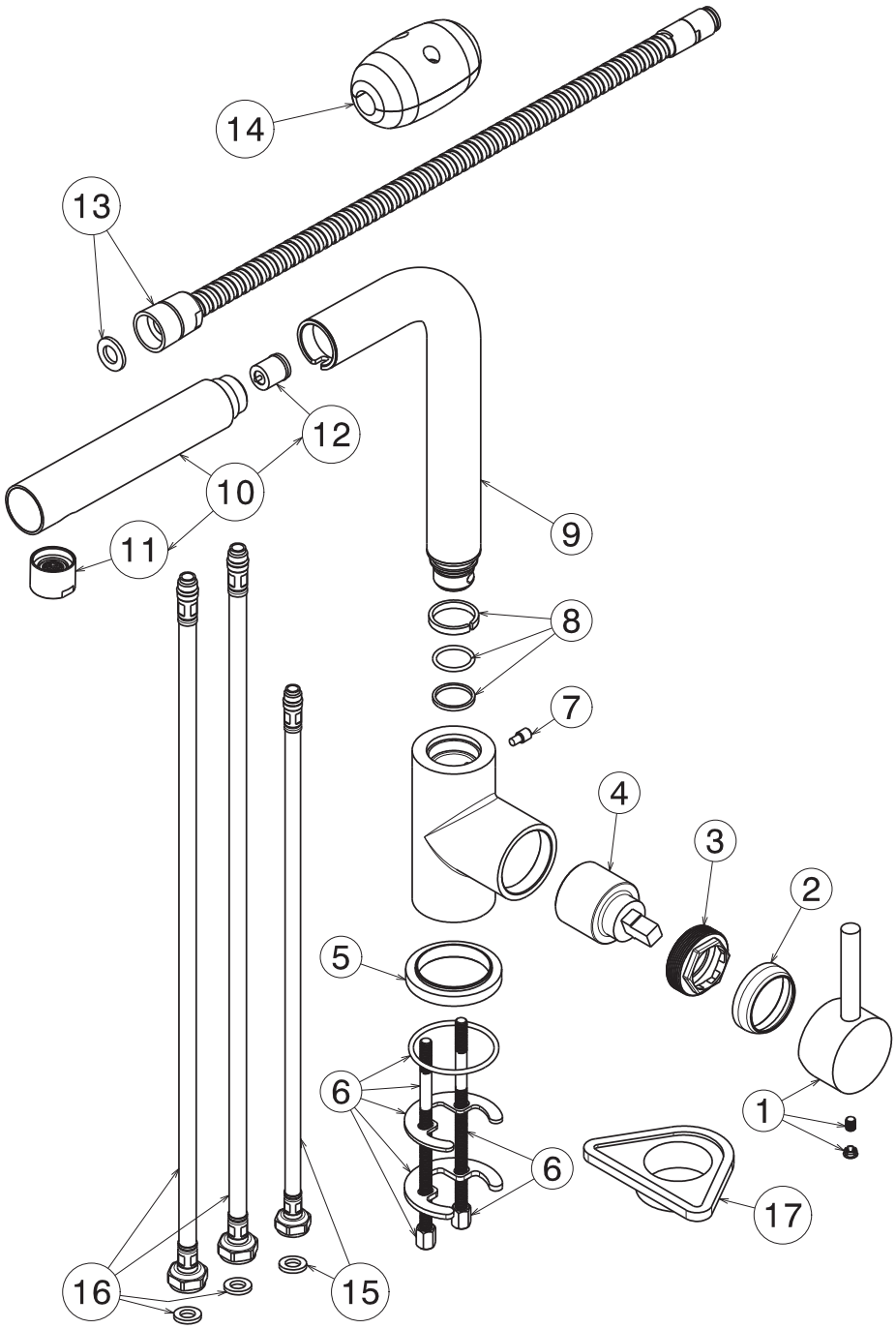
1	24581
2	24582
3	24583
4	14720
5	24588
6	12237
7	12678
8	13387
9	24589
10	16134
11	69
12	10696
13	354
14	11982
15	25812
16	25808
17	11953