newform

REAL
KITCHEN MIXER WITH DUAL SPRAY
63435

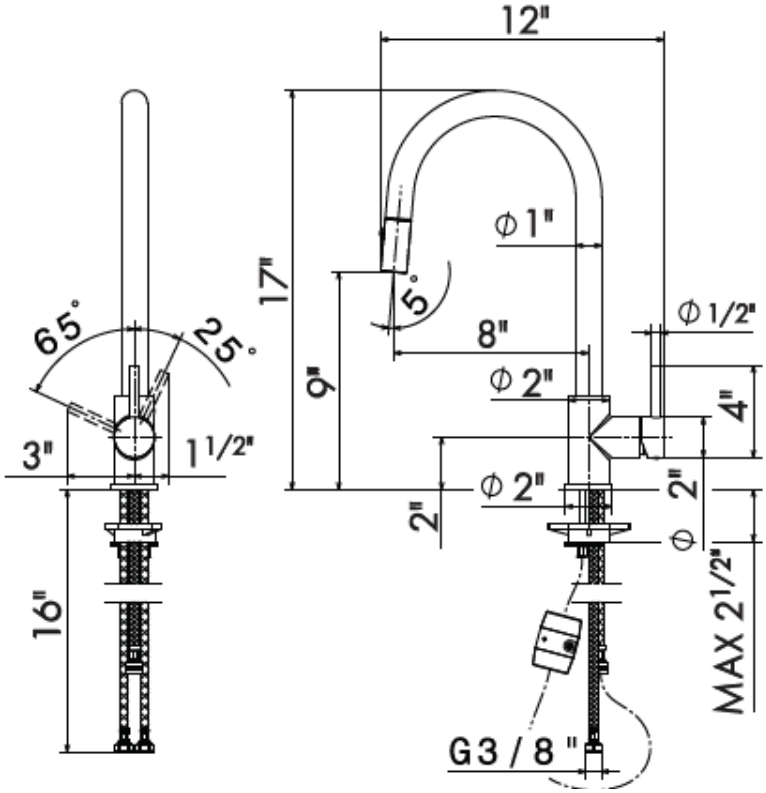

- Cartridge: 14720.00.000

AVAILABLE FINISHES

21.018
CHROME

31.028
BRUSHED NICKEL

newform

REAL
KITCHEN MIXER WITH DUAL SPRAY
63435
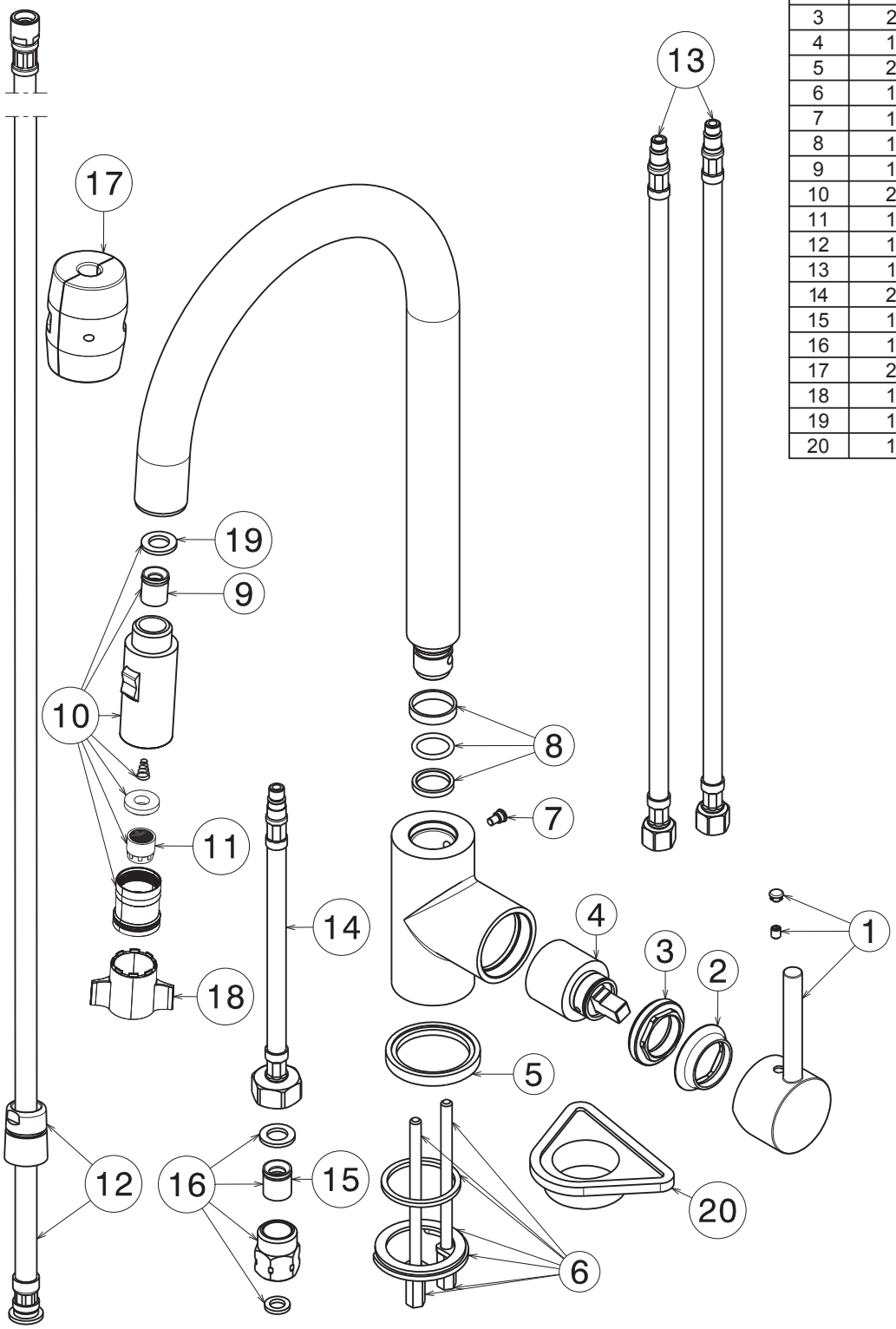
1	24616
2	25228
3	25227
4	14720
5	24617
6	17423
7	12677
8	12734
9	15726
10	25289
11	16755
12	15145
13	15085
14	25774
15	15701
16	15752
17	24622
18	13362
19	10035
20	11953