newform

MAKI

KITCHEN MIXER WITH PULL OUT SPOUT

71845

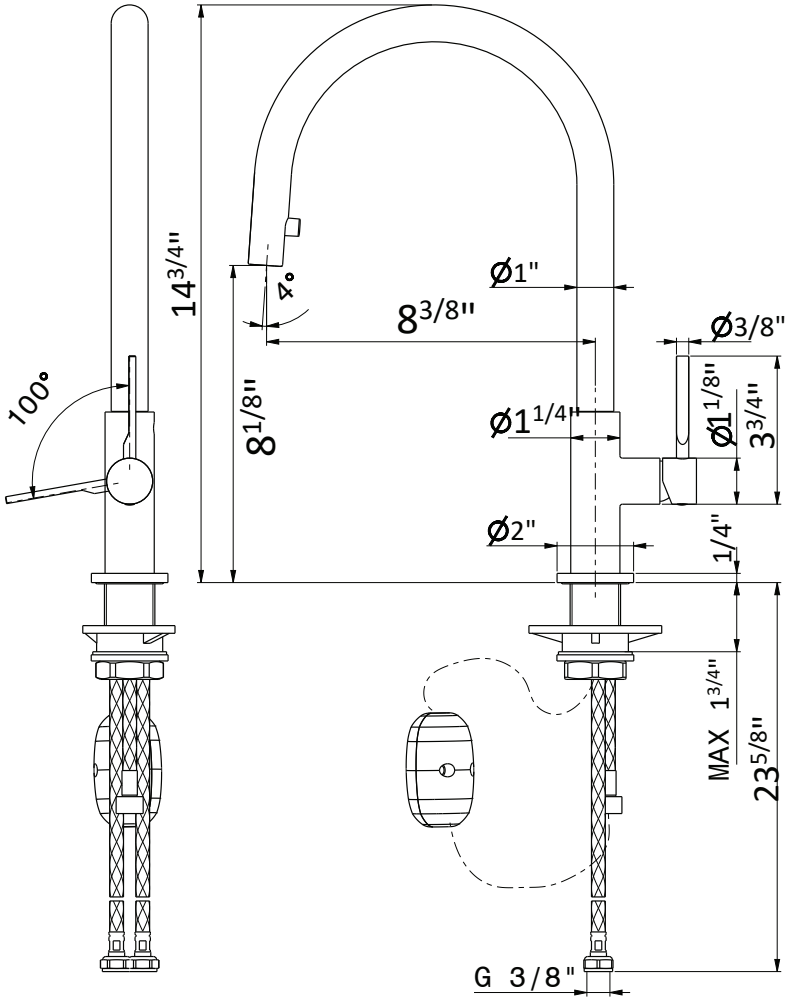

- Cartridge: 25973.00.000

AVAILABLE FINISHES

21.018 *CHROME*

31.028 *BRUSHED NICKEL*

59.064 *BRUSHED GUN METAL PVD*

M0.076 *CARBON SATIN - EXCLUSIVE METAL*

01.093 *MATT BLACK*

59.098 *BRUSHED PALE GOLD*

59.067 *BRUSHED COPPER BRONZE PVD*

newform

MAKI

KITCHEN MIXER WITH PULL OUT SPOUT

71845
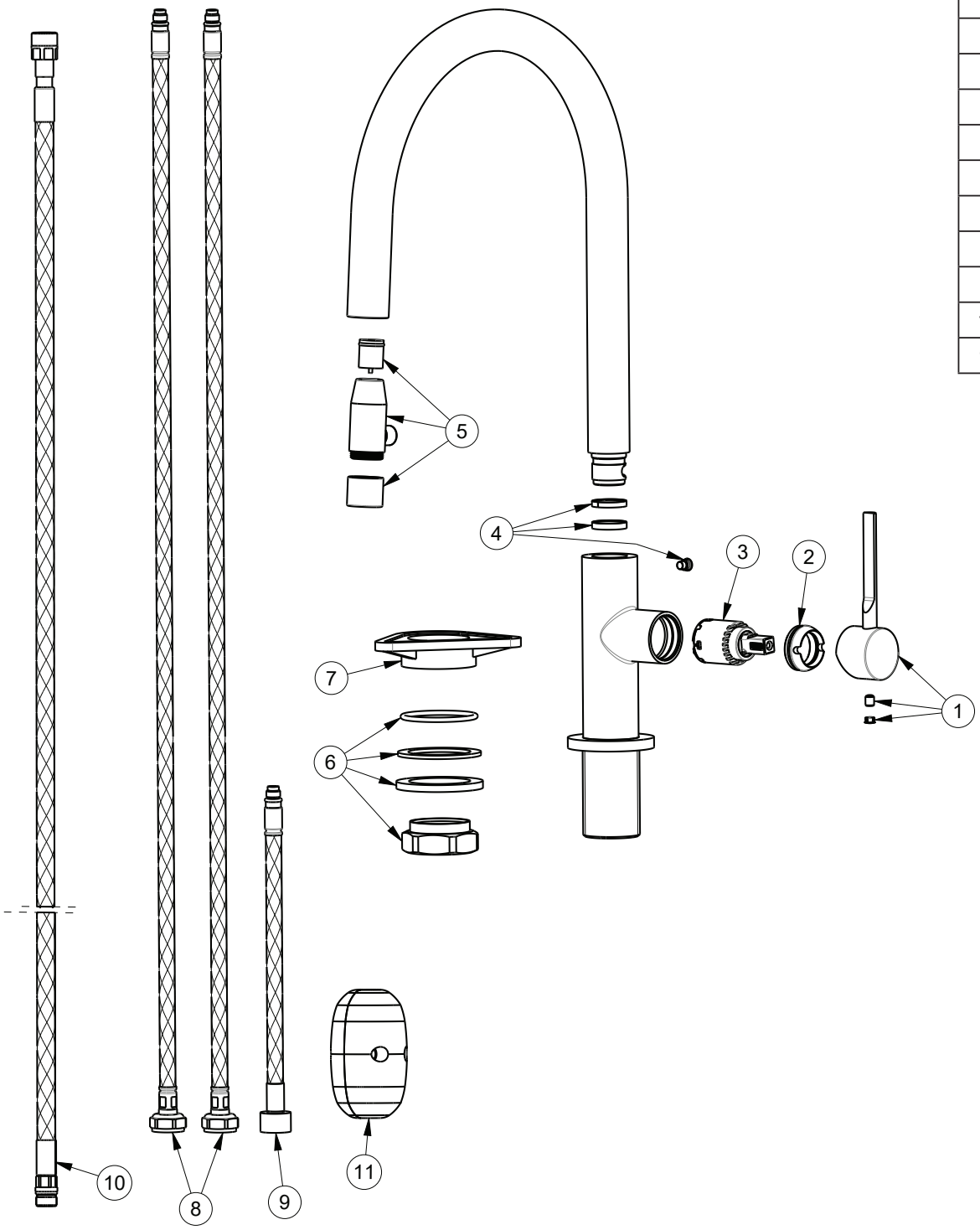
1	30870
2	24112
3	25973
4	13393
5	22751
6	12389
7	11953
8	25804
9	25812
10	25847
11	17821