newform

XT
DECK MOUNTED TUB FILLER SET
4280C

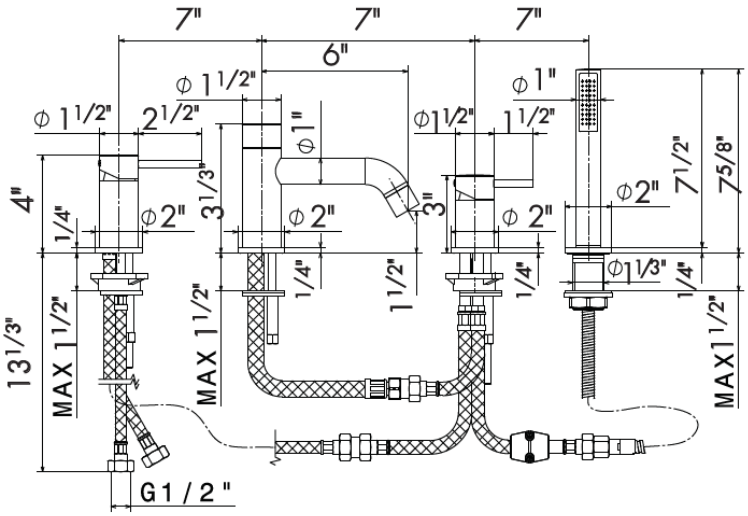

- Cartridge: 14720.00.000
- Diverter Cartridge: 11576.00.000

AVAILABLE FINISHES

21.018 CHROME

01.014 MATT WHITE

01.093 MATT BLACK

31.028 BRUSHED NICKEL

58.061 COPPER BRONZE PVD

58.063 GUN METAL PVD

59.064 BRUSHED GUN METAL PVD

61.020 GLOSSY GOLD