newform

ERGO-OPEN

SINGLE LEVER BASIN MIXER WITH POP UP

66510

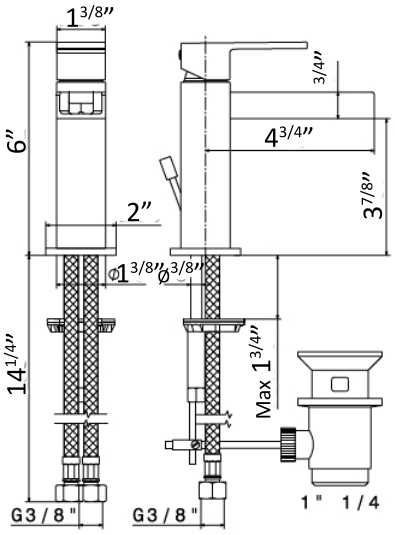

- Cartridge: 25906.00.000

AVAILABLE FINISHES

21.018
CHROME

02.014
MATT WHITE
& CHROME

02.093
MATT BLACK
& CHROME

newform

ERGO-OPEN

SINGLE LEVER BASIN MIXER WITH POP UP

66510-66513

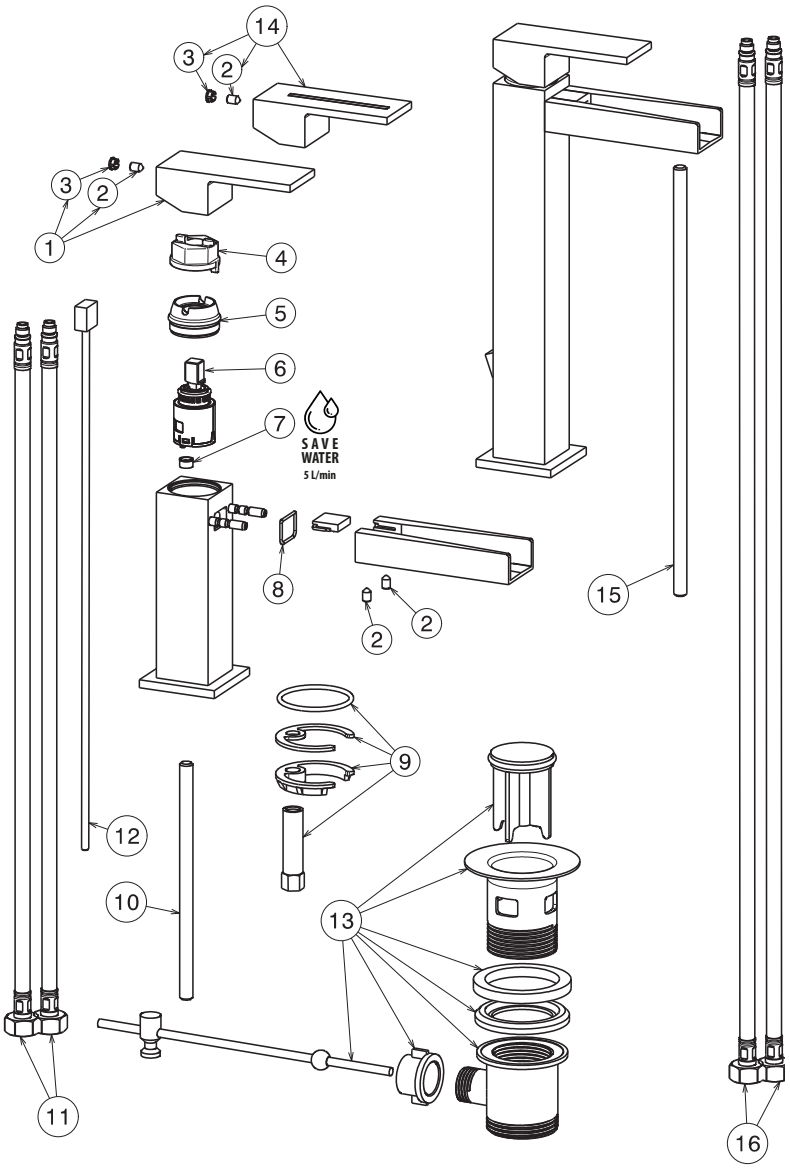

1	26170
2	13424
3	15652
4	25293
5	26102
6	25906
7	15717
8	12773
9	12160
10	16992
11	25775
12	19750
13	222
14	26171
15	15533
16	25776