HORUS

ZEPHYR

COMPLETE WALL BATH/SHOWER MIXER

100.16.797

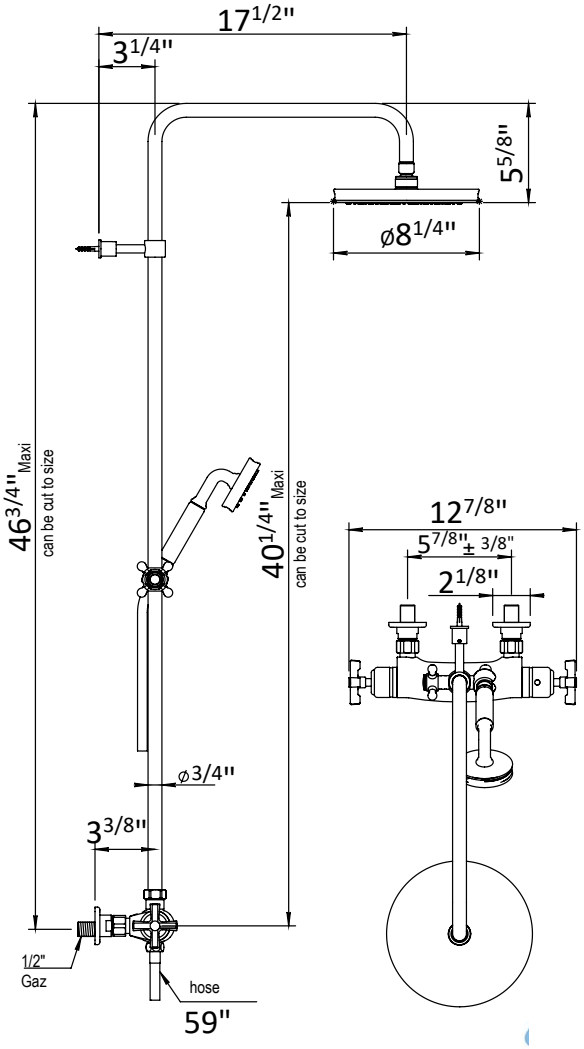

- Cartridge: HOP92.934BT

STANDARD FINISHES

PC Chrome

PN Polished Nickel

BN Brushed Nickel

SPECIALTY FINISHES

MB Matte Black

SG Satin Gold

GM Gun Metal

WH Ice White