newform

ROUGH-IN

SINGLE LEVER WALL MIXER ROUGH IN
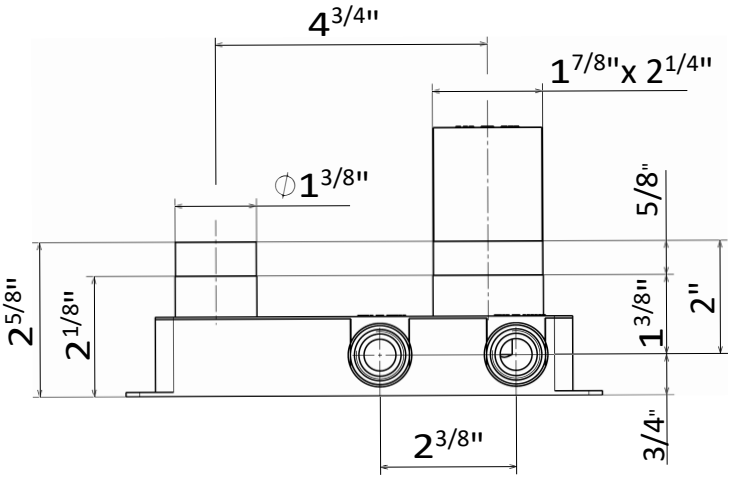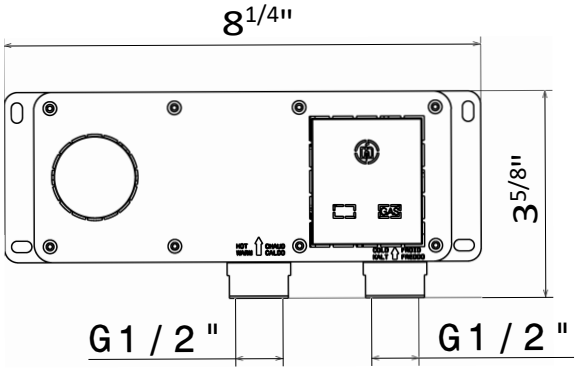
27854.00.000