WELLNESS

STEEL ROUND 16” RAIN SHOWERHEAD WITH WATERFALL JET

684

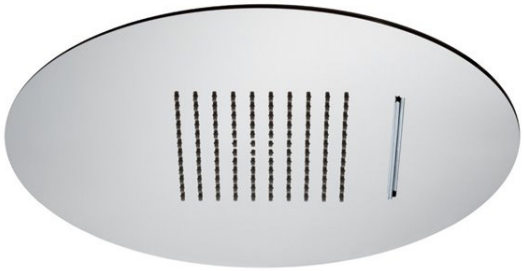

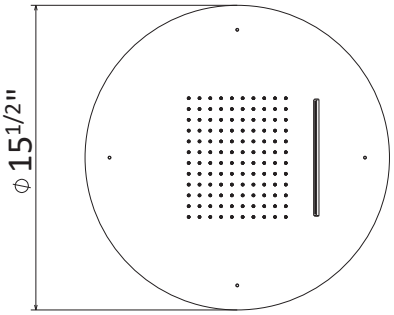

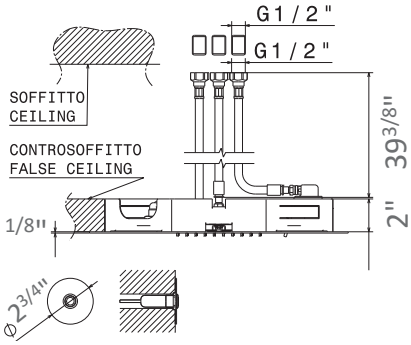

AVAILABLE FINISHES

- **21.018** *CHROME*
- **01.014** *MATT WHITE*
- **01.093** *MATT BLACK*
- **31.028** *BRUSHED NICKEL*
- **59.064** *BRUSHED GUN METAL PVD*
- **M0.070** *TITANIUM SATIN*
- **M0.071** *GOLD SATIN*
- **M0.072** *COPPER SATIN*
- **M0.075** *COPPER GLOSSY*