newform

EXTRO
TUB SPOUT
69337

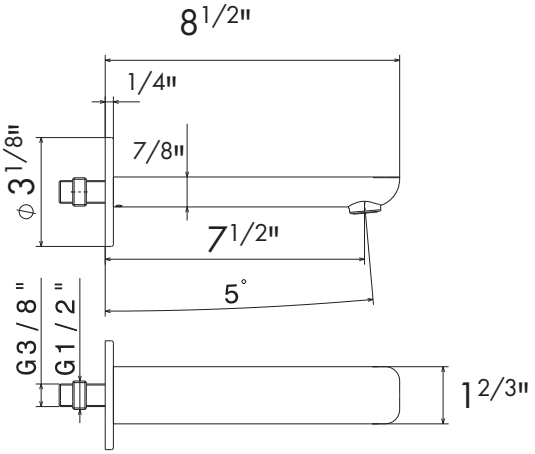

AVAILABLE FINISHES

21.018
CHROME