Aria

VANITY COLLECTION VANITÉ

2025 PRICELIST

aloredesign.com

streamlinecanada.ca

ABOUT ARIA

PROUDLY MADE IN CANADA

Aria's brand is divided among three distinct programs:

LUSSO Step into a world of unparalleled luxury with LUSSO, our flagship program designed to elevate your bathroom into a sanctuary of refined elegance. LUSSO represents the pinnacle of our craftsmanship, meticulously curated with only the finest components, finishes, and materials. From the solid wood cabinetry expertly crafted in Canada to the exquisitely sourced Italian marble countertops and designer hardware, every detail exudes sophistication and enduring quality.

LUSSO transcends the ordinary, offering a treasure trove of unique basin and vessel options to ignite your design imagination. Explore the sleek lines of contemporary European vessel sinks, handcrafted ceramic pieces featuring artisanal details, or indulge in the timeless allure of natural stone basins.

Elevate every touchpoint with the exquisite design-forward LUSSO hardware. Discover faucets and pulls meticulously crafted from solid brass, adorned with polished chrome, brushed nickel, or the warm gleam of champagne gold. Each piece is a work of art in itself, seamlessly blending functionality with captivating aesthetics.

MEZZO embodies the essence of the Aria vanity collection, showcasing exceptional craftsmanship and unparalleled elegance. Each piece is meticulously crafted in Canada, utilizing locally sourced materials for a commitment to quality and sustainability. MEZZO elevates your bathroom experience with the introduction of exquisite European ceramic basins, including the globally renowned GSI brand. These basins are renowned for their flawless design, superior durability, and timeless appeal, adding a touch of luxury to your space.

PROGETTO is our value-driven line, tailor-made for development projects including apartments, condominiums, rental units, secondary bathrooms, and powder rooms. Each vanity is proudly made in Canada using locally sourced components, ensuring exceptional quality and ethical manufacturing practices.

We pair our vanities with stylish and durable composite basins, offering a cost-effective alternative to box store products typically sourced from China. This combination delivers exceptional value without compromising on aesthetics or performance, making PROGETTO the smart choice for budget-conscious projects.

Regardless of the program selected, you'll have the opportunity to immerse yourself in endless design possibilities. Our extensive range of styles, colors, and sizes caters to every taste and preference. Explore timeless classics, embrace contemporary trends, or forge your own unique path - the choice is yours. Discover the perfect combination to transform your bathroom into your personalized haven!

TABLE OF CONTENTS

LUSSO

ATELIER. 5
REGALO. 6
FARFALLA. 8
FELICITA. 11
ONDO. 12
SOGNO. 14
MIRRORS 15

MEZZO

NEWPORT. 18
SHAKER. 19
ELITE 20
APERTO 22
STELLA 24
VERSO 28
EXTRO 29
ACCESSORIES. 30

PROGETTO

STUDIO. 34
CITY SCAPE. 35
VIVIENNE 36
CANYON 37
GABLE 38
DUNE. 39
OASIS 40
FLORENCE. 41
THE BOULEVARD. 42

INSTRUCTIONS & WARRANTY. 43

LUSSO

ATELIER IN BLACK RECON + MATTE BLACK SHOWN ABOVE

The **ATELIER** Creation

Our bespoke Atelier collection allows you to chose from the highest quality, unique products to create a truly one of a kind vanity! We offer the GSI Pura ultra slim basin in a variety of finishes, which you can pair with any of the 3 carefully selected materials for your vanity drawers. Basins are sold separately, be sure to indicate the code.

Each drawer front finish tells a uniqe story. Select from the charred look of Black Recon, the eye-grabbing design of Walnut Aztec or the premium shimmer of Bronze Metallic. No matter which finish you pick, your Atelier vanity will become a conversation piece that is undeniably you.

Your premium creation is completed by the inclusion of a black, leather-like drawer interior. This truly one-of-a-kind vanity comes with push-to-open drawers — no handle required.

DRAWER FRONTS

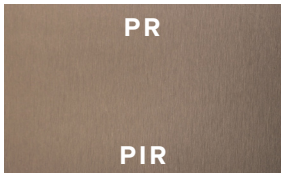

Piramide

Black Recon

Walnut Aztec

VANITY FRAME

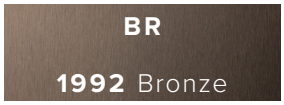

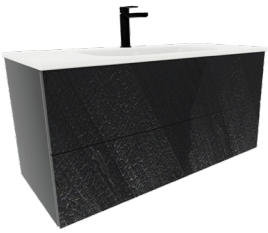

ATELIER32

PR+BR	**$3450**
BR+MB	**$4399**
WA+FA	**$4199**

ATELIER40

PR+BR	**$3950**
BR+MB	**$4899**
WA+FA	**$4699**

GSI PURA BASINS 32¼ or 40”

Glossy White
32¼” - 8885011
$895
40” - 8886011
$1135

Matte Creta
32¼” - 8885008
$950
40” - 8886008
$1245

Matte White
32¼” - 8885009
$950
40” - 8886009
$1245

Matte Black
32¼” - 8885026
$950
40” - 8886026
$1245

32¼ or 40” VANITY AVAILABLE

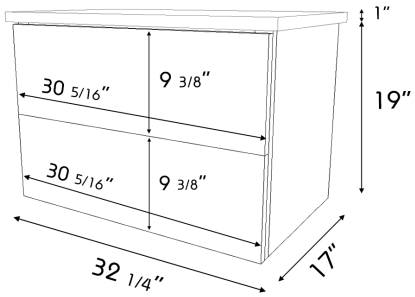

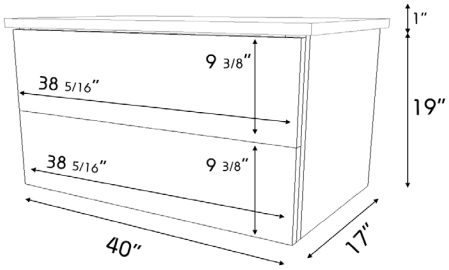

LUSSO

MADE IN CANADA

PUSH TO OPEN DRAWER

LEATHER-LIKE DRAWER INTERIOR

The REGALO Vanity Range

LUSSO

MADE IN ITALY

REG176DR in Tobacco Oak

SOLID COLORS

- MW — Matte White
- GP — Graphite
- TO — Tobacco

MARBLE FINISHES

- OX — Onyx
- WS — White Stone
- BS — Black Stone
- BGS — Black & Gold Stone

FEATURES

- Push Opening & Soft Closing drawers
- Organizers in top drawer
- 45 degree Resin basin edge
- Light linen interior
- Glass sides & bottom
- Center & Side Door or drawers

REG141 in Black & Gold Stone

REG1042DOLH in White Stone

The **REGALO** Vanity Range

REG702 OX

Code	Description	Finish	List Price
REG702	70cm Single Bowl Vanity with 2 drawers	SOLID MARBLE	**$3395** **$4450**

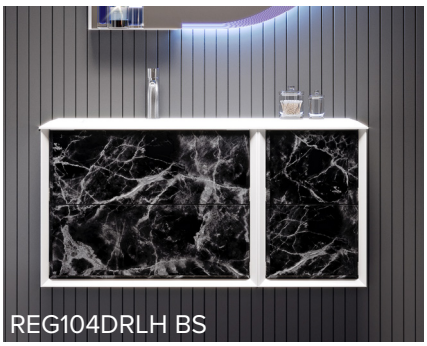

REG104DRLH BS

REG104DOLH	104cm Left hand Single Basin Vanity with 2 drawers and 1 Right Hand Door	SOLID MARBLE	**$4725** **$6250**
REG104DORH	104cm Right hand Single Basin Vanity with 2 drawers and 1 Left Hand Door	SOLID MARBLE	**$4725** **$6250**
REG104DRLH	104cm Left hand Single Basin Vanity with 4 drawers	SOLID MARBLE	**$5250** **$6950**
REG104DRRH	104cm Right hand Single Basin Vanity with 4 drawers	SOLID MARBLE	**$5250** **$6950**

REG141 BGS

REG141	141cm Double Basin Vanity with 4 drawers	SOLID MARBLE	**$6695** **$8775**

REG176DR TO

REG176DO	176cm Double Basin Vanity with 4 drawers and centred door	SOLID MARBLE	**$8650** **$10995**
REG176DR	176cm Double Basin Vanity with 6 drawers	SOLID MARBLE	**$8995** **$11995**

LUSSO

MADE IN ITALY

The **FARFALLA** Vanity Range

LUSSO

MADE IN ITALY

SOLID COLORS

MW	MC	GR	MB	PB
Matte White	Matte Cement	Matte Green	Matte Black	Petrol Blue

FLUTED FINISHES

MWR	MCR	GRR	MBR	PBR
Matte White	Matte Cement	Matte Green	Matte Black	Petrol Blue

FEATURES

- Thick Resin Basin Included
- Soft Closing
- Interior drawers, dark interior
- Fluted Drawer fronts
- Modular Design Options
- Matching Storage Cabinets
- Glass divider in top drawer*
  (in 70, 90, 120cm vanities only)

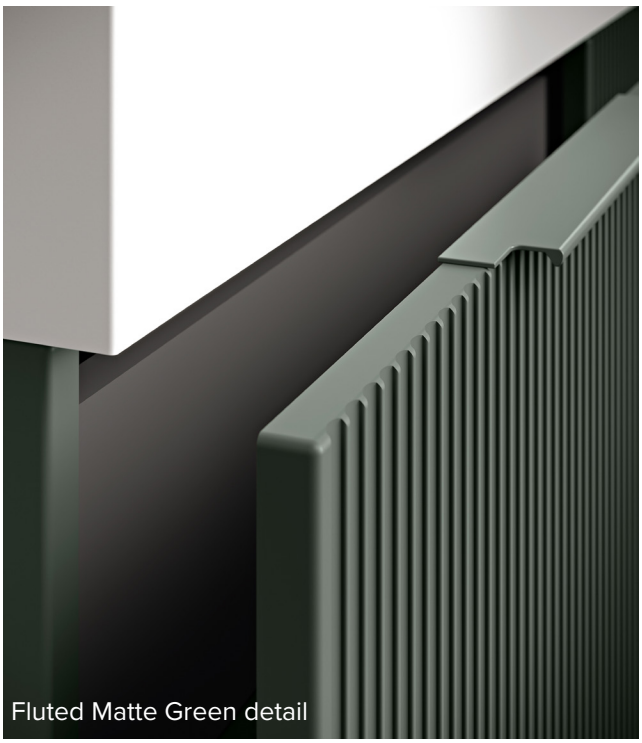
Fluted Matte Green detail

FARVLIN PB

BRASH
Aluminum panel
with adjustable
shelves.
H90cm x W25cm

$2295

The **FARFALLA** Vanity Range

FAR50T GR

Code	Description	Finish	List Price
FAR50T	50cm Single Basin Vanity, 1 Drawer plus interior drawer Total Height 54.5cm, Depth 45cm	SOLID FLUTED	**$2775** **$2950**
CAB50	50cm x H27cm x D45cm Cabinet	SOLID FLUTED	**$1150** **$1295**

FAR70T FC

FAR70T	70cm Single Basin Vanity, 1 Drawer plus interior drawer Total Height 54.5cm, Depth 45cm Glass divider in interior top drawer	SOLID FLUTED	**$3395** **$3595**
CAB70	70cm x H27cm x D45cm Cabinet	SOLID FLUTED	**$1295** **$1450**

FAR90T PB

FAR90T	90cm Single Basin Vanity, 1 Drawer plus interior drawer Total Height 54.5cm, Depth 45cm Glass divider in interior top drawer	SOLID FLUTED	**$3750** **$3995**
CAB90	90cm x H27cm x D45cm Cabinet	SOLID FLUTED	**$1425** **$1595**

FAR120T GRR

FAR120T	120cm Double Basin Vanity, 2 Drawers plus interior drawers Total Height 54.5cm, Depth 45cm Glass divider in interior top drawer	SOLID FLUTED	**$5295** **$5625**
CAB120	120cm x H27cm x D45cm Cabinet	SOLID FLUTED	**$2295** **$2595**

FARVLIN	35cm 1 Door Linen Cabinet with interior mirror, 3 shelves, soft close drawer and hair dryer holder. Black interior. Height 150cm, Depth 38cm	SOLID FLUTED	**$1395** **$1625**

LUSSO

MADE IN ITALY

The **FARFALLA** Vanity Range

LUSSO

MADE IN ITALY

FAR50T GR & CAB50 MBR

Code	Description	Finish	List Price
FAR50S	50cm Single Basin Vanity, 1 Drawer plus interior drawer Total Height 39cm, Depth 45cm	SOLID FLUTED	**$2095** **$2215**
CAB50	50cm x H27cm x D45cm Cabinet	SOLID FLUTED	**$1150** **$1295**

FAR70T MCR

FAR70S	70cm Single Basin Vanity, 1 Drawer plus interior drawer Total Height 39cm, Depth 45cm Glass divider in interior top drawer	SOLID FLUTED	**$2595** **$2725**
CAB70	70cm x H27cm x D45cm Cabinet	SOLID FLUTED	**$1295** **$1450**

FAR90S MWR & CAB90 MWR

FAR90S	90cm Single Basin Vanity, 1 Drawer plus interior drawer Total Height 39cm, Depth 45cm Glass divider in interior top drawer	SOLID FLUTED	**$2850** **$2995**
CAB90	90cm x H27cm x D45cm Cabinet	SOLID FLUTED	**$1425** **$1595**

FAR120T MC & CAB70 MC

FAR120S	120cm Double Basin Vanity, 2 Drawers plus interior drawers Total Height 39cm, Depth 45cm Glass divider in interior top drawer	SOLID FLUTED	**$4325** **$4550**
CAB120	120cm x H27cm x D45cm Cabinet	SOLID FLUTED	**$2295** **$2595**

The **FELICITA** Vanity Range

FEL100 in Walnut

FLUTED COLORS

Matte White | Cotton | Matte Green

Tobacco Oak | Walnut

FEATURES

- Ceramic Basin included
- Soft Closing
- Finger Pull Drawers
- Fluted Drawer Fronts
- Dark Interior Drawers

FEL60 in Matte White

LUSSO

MADE IN ITALY

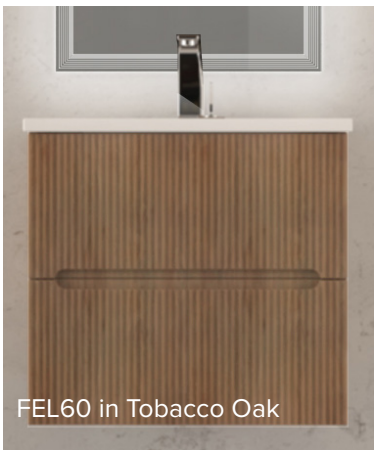

FEL60 in Tobacco Oak

Code	Description	Finish	List Price
FEL60	60cm Single Basin with 2 drawers Height 54.5cm, Depth 45cm	FLUTED	**$1995**
FEL100	100cm Single Basin with 2 drawers Height 54.5cm, Depth 45cm	FLUTED	**$2495**

The ONDO Vanity Range

LUSSO

MADE IN ITALY

OND41GR RD & OND55MC RD & OND55 RD

COLORS

WH — Glossy White

RD — Glossy Red

FEATURES

- Resin or Glass Basin Options
- Waterproof & Scratchproof
- Soft Closing
- Chrome Drawers Pulls
- Grey Interior Drawers

OND27R WH

Code	Description	List Price
OND27G	27” Vanity with **Glass** Basin	$2450
OND27R	27” Vanity with **Resin** Basin	$2450

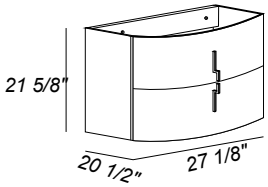

OND41RL RD

OND41GL	41” Vanity with **Left** hand **Glass** Basin	$4425
OND41GR	41” Vanity with **Right** hand **Glass** Basin	$4425
OND41RL	41” Vanity with **Left** hand **Resin** Basin	$4425
OND41RR	41” Vanity with **Right** hand **Resin** Basin	$4425

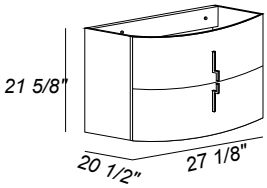

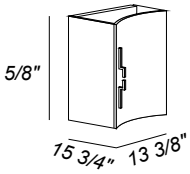

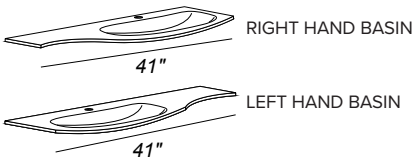

OND54G WH

OND54G	54” Vanity with **Glass** Basin	$5995
OND54R	54” Vanity with **Resin** Basin	$5995

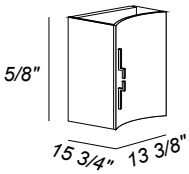

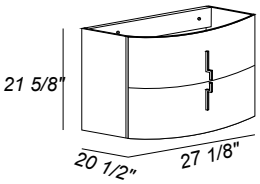

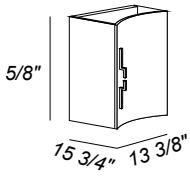

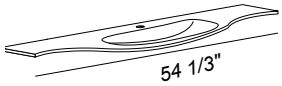

The **ONDO** Vanity Range

Code	Description	List Price
OND54DBG	54” Vanity with Double Bowl **Glass** Basin	**$5995**
OND54DBR	54” Vanity with Double Bowl **Resin** Basin	**$5995**

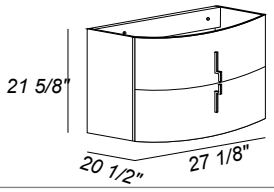

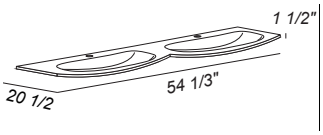

OND67C 67” Tall Cabinet with 3 doors. Reversible. **$950**

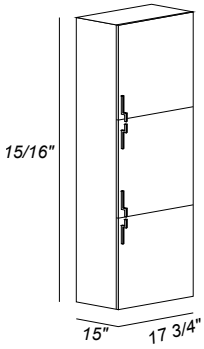

OND55MC 55” Tall Cabinet with mirror. Reversible. **$875**

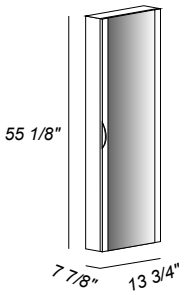

OND55 55” Tall Cabinet. Reversible. **$725**

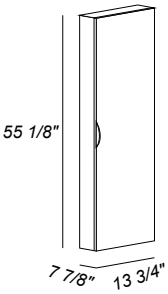

LUSSO

MADE IN ITALY

The **SOGNO** Vanity Range

LUSSO

FEATURES

Live edge wood countertop pre-drilled for a vessel basin. Matte black metal frame included. 100cm W x 50cm D x 74cm H

LIVE100 $2750

*Please note: Due to the nature of live edge wood, not all countertops will look exactly the same.

Chose from the following variety of Hand-made Italian Terzofoco vessels to complete the vanity:

CIOCCO

0302TN $1635

Black Gres with transparent glaze inside, and natural finish outside

15¾"Ø, 5⅛"h

BOUQUET

0405 WGP $5995

Glossy White & Gold Petal Casted by hand with hand-made porcelain petals

17¾"Ø, 5¾"h

KILYX

0207BP $2450

Persia blue crystalline inside and ultramarine blue outside.

16½"Ø, 7"h

RING

0201MWMG $2880

Matte White & Matte Gold

16"Ø, 4¾"h

DALIA

0429 NBC $2225

Drop in sink in fireclay casted by hand. Blue and white with metallic finishing

18⅞"Ø, 2⅜"h

terzofoco one by one *Many additional colours, styles and sizes are available form the Terzofoco line. Contact us for more*

The MIRRORS

Kelvin Degree | Dimmable | Touch Switch | Adjustable Hangers | Reversible | Anti-fog

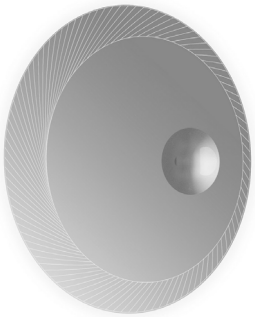

Code	Description	List Price
46022	100cm Round mirror with LED lighting with laser processing and magnifier. 6500 Kelvin. Adjustable hangers with wood backing. Reversible.	$1595

Code	Description	List Price
46015	95cmx70cm Anti-fog mirror with sandblasted LED. 6500 Kelvin. Adjustable hangers with wood backing.	$995
46061	120cmx70cm Anti-fog mirror with sandblasted LED. 6500 Kelvin. Adjustable hangers with wood backing.	$1195
46016	141cmx70cm Anti-fog mirror with sandblasted LED. 6500 Kelvin. Adjustable hangers with wood backing.	$1225

Code	Description	List Price
46078	47cm round mirror with double dimmer	$650
46079	80cm round mirror with double dimmer	$995
46080	104cm round mirror with double dimmer	$1295

Code	Description	List Price
46068	110cm x 65cm Oval dimmable LED mirror with touch system. 6500 Kelvin. Adjustable hangers with wood backing.	$1350
46067	110cm x 45cm Oval dimmable LED mirror with touch system. 6500 Kelvin. Adjustable hangers with wood backing.	$1175

LUSSO

MEZZO

STE6DLG AH-MB SHOWN ABOVE

MEZZO FINISHES

Group 1 Wood Grain

WW S663CA Wood White	SK H54 Skye	AH L591 Acacia Honey	FA L582 Fashionista	FC L583 First Class	PN K63 Pietra Nobella

Group 2 Solid Finishes

GLOSSY	WH HG110 Glossy White	BL HG120 Glossy Black				
MATTE	MW ST210 Matte White	MB ST220 Matte Black	WS K82 White Smoke	SR K86 Serenity	CH 123 Charcoal	NV K45 Wave Blue

MEZZO

MADE IN CANADA

CODING INSTRUCTIONS

HOW TO ORDER

1. CHOOSE THE BASIN

Basins are now sold separately. Choose the basin you wish to design the vanity around.

2. SELECT VANITY OPTION

Select between 2 or 3 drawers. In case of a double basin, the options are 4 or 6 drawers.

3. INDICATE VANITY FINISH

If you wish to have a frame finish different than the drawer, indicate the frame finish first. If mixing Group 1 and Group 2 finishes, pricing of Group 2 will apply.

4. OPTIONAL UPGRADES

Some units offer upgrades for the handles to premium finishes. Chrome comes standard and does not require any indication, so only mark a finish here if you are upgrading to matte black ($50 ea) or brushed gold ($50 ea)

EXAMPLE:

STE3DL

GROUP 1	**$1960**
GROUP 2	**$2349**

BASIN OPTIONS:

1. GSI NORM
8633011 ✓
$1095

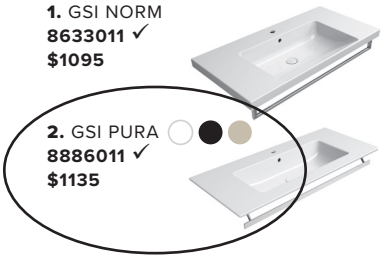

2. GSI PURA
8886011 ✓
$1135

FINAL PO:

8886011 $1135

STE3DL NV-BB $1700 + 3x$50 = $1850

MODEL #
FINISH
HANDLE

The **NEWPORT** Vanity Range

MEZZO

MADE IN CANADA

L582

The Newport collection is available in two sizes, 24” and 36”. Both models feature soft close doors and stunning brass hardware. The larger 36” version features a centered basin with ample counter space. Configuration only available as shown. The 3/4” Pure White Quartz countertop is paired with a ceramic undermount bowl from the Cavalli collection. Available in Fashionista #L582

NEWPORT24

Fashionista **$1449**

UNDERMOUNT BASIN: CAVALLI MY-1801
PURE WHITE QUARTZ COUNTERTOP

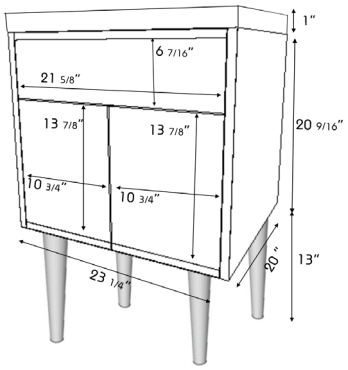

NEWPORT36

Fashionista **$1995**

UNDERMOUNT BASIN: CAVALLI MY-1801
PURE WHITE QUARTZ COUNTERTOP

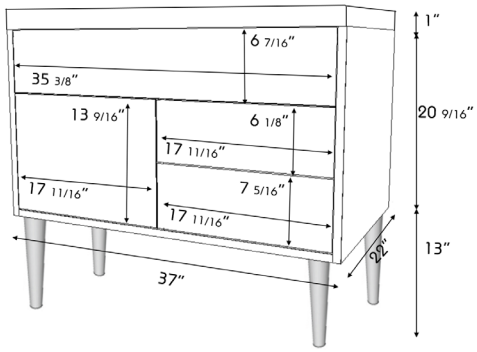

The SHAKER Vanity Range

MEZZO

MADE IN CANADA

The Shaker collection uses 3/4” thick doors with a 1/2” shaker frame and minimal radius of only 2.5mm. It is available in 2 drawers with a soft close system, and a light grey interior. The vanities can be installed wall-hung or on legs. Includes cut-out for drain in top drawer. These are paired with GSI’s Norm basins, which have a stunning 5cm profile (~2”). We pair it with a brushed brass handle, but chrome is available upon request.

GROUP 1
WOOD GRAIN

FC	FA
L583 First Class	**L582** Fashionista

GROUP 2
SUPERMAT

WS	SR
K82 White Smoke	**K86** Serenity

*Please note: Due to the unique look of shaker doors, the Shaker line is currently only available in the above four finishes.

SHAKER2M

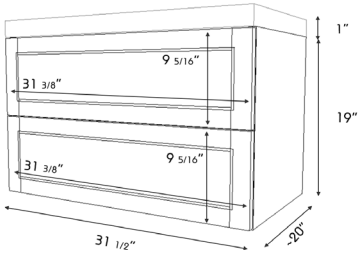

SHAKER3M

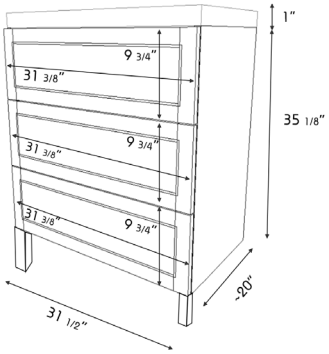

MODEL#	PRICE
SHAKER2M	
GROUP 1	**$2150**
GROUP 2	**$2350**

MODEL#	PRICE
SHAKER3M	
GROUP 1	**$2995**
GROUP 2	**$3295**

GSI NORM 31½”x19⅝”
8634011 ✓
$750

GSI KUBE-X 31½”x18½”
9422011 ✓
$1195
9422009 ✓ ○
$1425
9422026 ✓ ●
$1425

GSI NUBES 31½”x19⅝”
9622011 ✓
$1365

✓ Basin is part of our in-stock program
○ ● Indicates availability in matte colours

Special Order! Production Lead Time: 3-4 Weeks

The ELITE Vanity Range

MEZZO

MADE IN CANADA

The Elite collection features one deep drawer with soft close system, finger pull and a light grey interior. The frame and drawer can be the same finish, or different, your choice!

Can be installed wall-hung or on legs. Includes cut-out for drain. Please specify number of basin drill holes and hole positioning. When ordering different frame and drawer finishes, pricing of the more expensive finish will apply.

Large Vanity

MODEL#	PRICE
ELITELG	
GROUP 1	**$1140**
GROUP 2	**$1285**

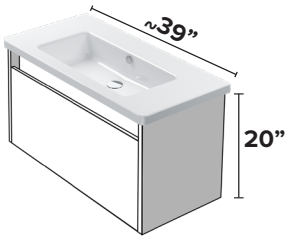

Basins Options:

1. GSI NORM 39⅜"x19⅝"
8633011 ✓
$925

2. GSI PURA 40⅛"x18⅛"
8886011 ✓
$1135

3. GSI NUBES 39⅜"x19⅝"
9651011 ✓
$1595

4. GSI KUBE-X 39⅜"x18½"
9423011 ✓
$1475

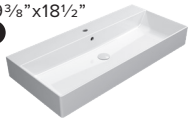

✓ Basin is part of our in-stock program
Also available in matte colours

Medium Vanities

MODEL#	PRICE
ELITEM	
GROUP 1	**$1065**
GROUP 2	**$1185**

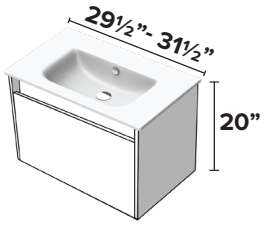

Basins Options:

1. GSI NORM 31½"x19⅝"
8634011 ✓
$750

2. GSI PURA 32¼"x18⅛"
8885011 ✓ ○ ● ●
$895

3. GSI NUBES 31½"x19⅝"
9622011 ✓ ○ ●
$1365

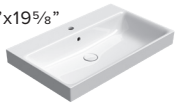

4. GSI KUBE-X 31½"x18½"
9422011 ✓ ○ ●
$1195

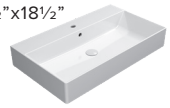

5. CATALANO NEW LIGHT 31½"x18⅞"
80LI48
$540

While quantities last

Small Vanities

MODEL#	PRICE
ELITES	
GROUP 1	**$995**
GROUP 2	**$1100**

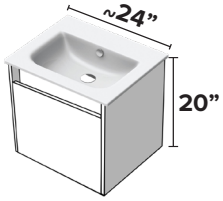

Basins Options:

1. GSI NORM 23⅝"x19⅝"
8635011 ✓
$595

2. GSI PURA 24⅜"x18⅛"
8884011 ✓ ○ ● ●
$525

3. GSI NUBES 23⅝"x19⅝"
9631011 ✓ ○ ●
$995

4. GSI KUBE-X 23⅝"x18½"
9431011 ✓ ○ ●
$685

MEZZO

MADE IN CANADA

✓ Basin is part of our in-stock program
○ ● Indicates availability in matte colours

Group 1 : WW | AH | SK | PN | FC | FA

Group 2 : WH | BL | MW | MB | WS | SR | CH | NV

MODEL - BASIN MODEL - FRAME FINISH - DRAWER FINISH

Order Basin Separately, and indicate hole drilling if applicable

The **APERTO** Vanity Range

MEZZO

MADE IN CANADA

Following all the same principles as the Elite, we added an open shelf below the drawer for additional storage. Once again, the frame and drawer finishes can be mixed and matched as you please!

Can be installed wall-hung or on legs. Includes cut-out for drain. Please specify number of basin drill holes and hole positioning. When ordering different frame and drawer colours, pricing of the more expensive finish will apply.

Large Vanities

MODEL#	PRICE
APERTOLG	
GROUP 1	**$1225**
GROUP 2	**$1400**

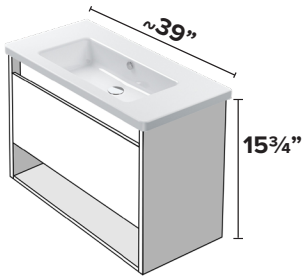

Basins Options:

1. GSI NORM 39⅜"x19⅝"
8633011 ✓
$925

2. GSI PURA 40⅛"x18⅛"
8886011 ✓
$1135

3. GSI NUBES 39⅜"x19⅝"
9651011 ✓
$1595

4. GSI KUBE-X 39⅜"x18½"
9423011 ✓
$1475

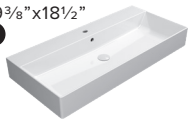

✓ Basin is part of our in-stock program
Also available in matte colours

The APERTO Vanity Range

Medium Vanities

MODEL#	PRICE
APERTOM	
GROUP 1	**$1140**
GROUP 2	**$1295**

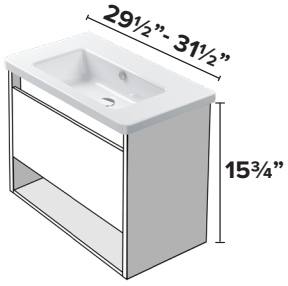

Basins Options:

1. GSI NORM 31½"x19⅝"
8634011 ✓
$750

2. GSI PURA 32¼"x18⅛"
8885011 ✓ ○ ● ●
$895

3. GSI NUBES 31½"x19⅝"
9622011 ✓ ○ ●
$1365

4. GSI KUBE-X 31½"x18½"
9422011 ✓ ○ ●
$1195

5. CATALANO NEW LIGHT 31½"x18⅞"
80LI48
$540

While quantities last

Small Vanities

MODEL#	PRICE
APERTOS	
GROUP 1	**$1060**
GROUP 2	**$1195**

Basins Options:

1. GSI NORM 23⅝"x19⅝"
8635011 ✓
$595

2. GSI PURA 24⅜"x18⅛"
8884011 ✓ ○ ● ●
$525

3. GSI NUBES 23⅝"x19⅝"
9631011 ✓ ○ ●
$995

4. GSI KUBE-X 23⅝"x18½"
9431011 ✓ ○ ●
$685

MEZZO

MADE IN CANADA

✓ Basin is part of our in-stock program
○ ● Indicates availability in matte colours

Group 1 : WW | AH | SK | PN | FC | FA

Group 2 : WH | BL | MW | MB | WS | SR | CH | NV

MODEL - FRAME FINISH - DRAWER FINISH

Indicate basin hole drilling instructions separately

The **STELLA** Vanity Range

MEZZO

MADE IN CANADA

The Stella collection features two or three drawers with soft close system and a light grey interior. The top drawer includes drain cut-out. You have the option of 4 different handle finishes, and optional matching legs! Can be installed wall hung or on legs. Please specify number of basin drill holes and hole positioning.

CHROME
Included in price

INSET BRUSHED NICKEL **NL**
$25 list extra per handle

BRUSHED NICKEL **BN**
$25 list extra per handle

MATTE BLACK **MB**
$50 list extra per handle

BRUSHED GOLD **BG**
$50 list extra per handle

2 Drawer Large Vanities

MODEL#	PRICE
STE2DLG	
GROUP 1	**$1350**
GROUP 2	**$1550**

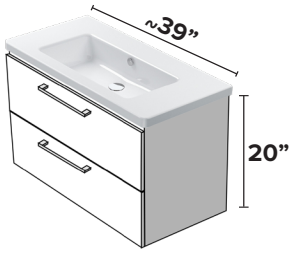

Basins Options:

1. GSI NORM 39⅜”x19⅝”
8633011 ✓
$925

2. GSI PURA 40⅛”x18⅛”
8886011 ✓ ○ ● ●
$1135

3. GSI NUBES 39⅜”x19⅝”
9651011 ✓ ○ ●
$1595

4. GSI KUBE-X 39⅜”x18½”
9423011 ✓ ○ ●
$1475

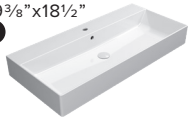

✓ Basin is part of our in-stock program
○ ● Indicates availability in matte colours

The STELLA Vanity Range

2 Drawer Medium Vanities

MODEL#	PRICE
STE2DM	
GROUP 1	**$1275**
GROUP 2	**$1450**

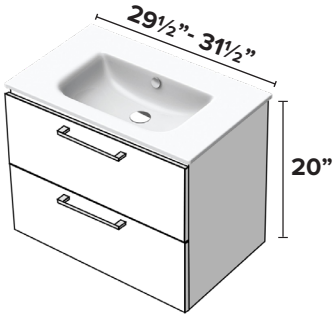

Basins Options:

1. GSI NORM 31½”x19⅝”
8634011 ✓
$750

2. GSI PURA 32¼”x18⅛”
8885011 ✓
$895

3. GSI NUBES 31½”x19⅝”
9622011 ✓
$1365

4. GSI KUBE-X 31½”x18½”
9422011 ✓
$1195

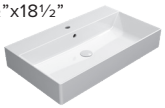

5. CATALANO NEW LIGHT 31½”x18⅞”
80LI48
$540

While quantities last

2 Drawer Small Vanities

MODEL#	PRICE
STE2DS	
GROUP 1	**$1195**
GROUP 2	**$1325**

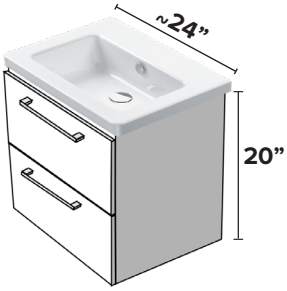

Basins Options:

1. GSI NORM 23⅝”x19⅝”
8635011 ✓
$595

2. GSI PURA 24⅜”x18⅛”
8884011 ✓
$525

3. GSI NUBES 23⅝”x19⅝”
9631011 ✓
$995

4. GSI KUBE-X 23⅝”x18½”
9431011 ✓
$685

MEZZO

MADE IN CANADA

Group 1 : WW | AH | SK | PN | FC | FA

Group 2 : WH | BL | MW | MB | WS | SR | CH | NV

MODEL - UNIT FINISH - HANDLE FINISH
Only indicate if different than chrome

Indicate basin hole drilling instructions separately

MEZZO

MADE IN CANADA

3 Drawer Large Vanities

MODEL#	PRICE
STE3DLG	
GROUP 1	**$1895**
GROUP 2	**$2195**

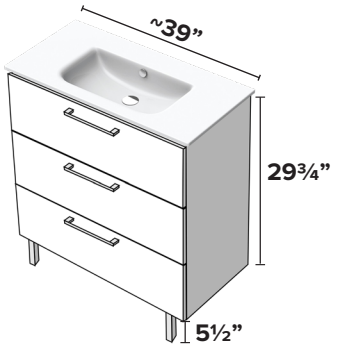

Basins Options:

1. GSI NORM 39⅜”x19⅝”
8633011 ✓
$925

2. GSI PURA 40⅛”x18⅛”
8886011 ✓
$1135

3. GSI NUBES 39⅜”x19⅝”
9651011 ✓
$1595

4. GSI KUBE-X 39⅜”x18½”
9423011 ✓
$1475

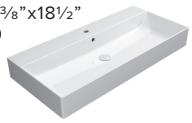

3 Drawer Medium Vanities

MODEL#	PRICE
STE3DM	
GROUP 1	**$1820**
GROUP 2	**$2085**

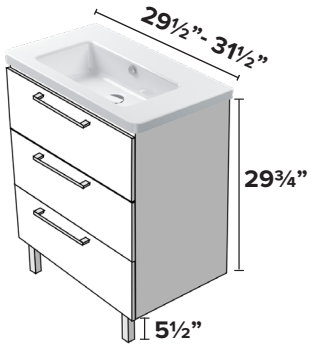

Basins Options:

1. GSI NORM 31½”x19⅝”
8634011 ✓
$750

2. GSI PURA 32¼”x18⅛”
8885011 ✓
$895

3. GSI NUBES 31½”x19⅝”
9622011 ✓
$1365

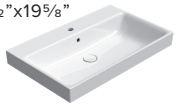

4. GSI KUBE-X 31½”x18½”
9422011 ✓
$1195

5. CATALANO NEW LIGHT 31½”x18⅞”
80LI48 ✓
$540

While quantities last

3 Drawer Small Vanities

MODEL#	PRICE
STE3DS	
GROUP 1	**$1725**
GROUP 2	**$1965**

Basins Options:

1. GSI NORM 23⅝”x19⅝”
8635011 ✓
$595

2. GSI PURA 24⅜”x18⅛”
8884011 ✓
$525

3. GSI NUBES 23⅝”x19⅝”
9631011 ✓
$995

4. GSI KUBE-X 23⅝”x18½”
9431011 ✓
$685

5. CATALANO NEW LIGHT 24⅜”x18⅞”
62LI ✓
$429

While quantities last

✓ Basin is part of our in-stock program
Also in Matt White, Matt Black & Matt Creta

The STELLA Vanity Range

Double Bowls

MODEL#	PRICE
STE4DDM	
GROUP 1	**$1950**
GROUP 2	**$2165**

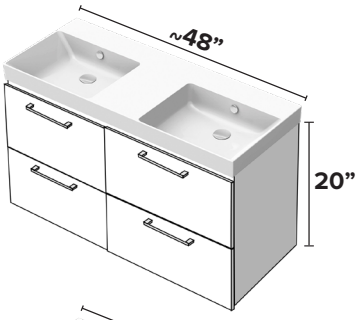

MODEL#	PRICE
STE6DDM	
GROUP 1	**$2795**
GROUP 2	**$3075**

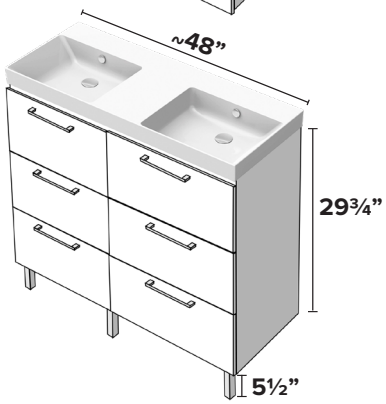

Basins Options:

1. GSI NORM 49¼”x19⅝”
8627011 ✓
$1595

2. GSI PURA 48”x18⅛”
8888011 ✓
$1075

3. GSI KUBE X 47¼”x18½”
9425011
$1955

4. CATALANO NEW LIGHT
49¼”x19⅝”
125LI $805 ✓

While quantities last

MEZZO

MADE IN CANADA

Large Double Bowls

MODEL#	PRICE
STE4DLG	
GROUP 1	**$2250**
GROUP 2	**$2475**

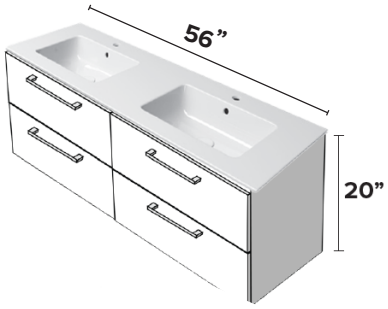

MODEL#	PRICE
STE6DLG	
GROUP 1	**$3075**
GROUP 2	**$3375**

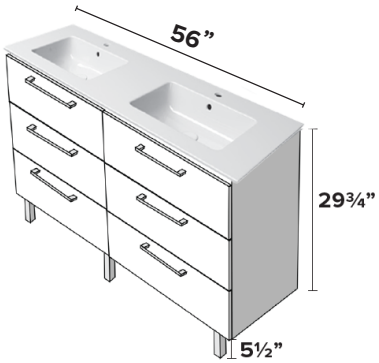

Basins Options:

1. GSI PURA 55⅞”x18⅛”
8889011 ✓
$1275

Group 1 : WW | AH | SK | PN | FC | FA

Group 2 : WH | BL | MW | MB | WS | SR | CH | NV

MODEL - UNIT FINISH - HANDLE FINISH
Only indicate if different than chrome

Indicate basin hole drilling instructions separately

The **VERSO** Vanity Range

MEZZO

MADE IN CANADA

The Verso collection features an ultra compact design, perfect for small spaces. You have the option of 4 different handle finishes! Comes with a left or right hinging door with soft close system and on adjustable shelf for more storage options. Hinge direction is required to be specified. Kube X 9486 has 9 stock colour options to chose from for the basin!

CHROME **CH**
Included in price

BRUSHED NICKEL **BN**
$25 list extra per handle

BRUSHED GOLD **BG**
$50 list extra per handle

MATTE BLACK **MB**
$50 list extra per handle

Verso Vanities

MODEL#	PRICE
VERSO	
GROUP 1	**$525**
GROUP 2	**$615**

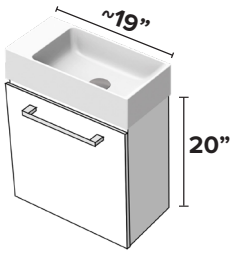

Basins Options:

GSI KUBE X 50x25

9486011	✓	**$550**
9486009	✓	**$810**
9486008	✓	**$810**
9486017	✓	**$810**
9486005	✓	**$810**
9486015	✓	**$810**
9486004	✓	**$810**
9486024	✓	**$810**
9486026	✓	**$810**

9486011 Glossy White

9486009 Matte White

9486008 Matte Creta

9486017 Matte Cement

9486005 Matte Tortora

9486015 Matte Ghiaccio

9486004 Matte Agave

9486024 Matte Blush

9486026 Matte Black

Group 1 : WW | AH | SK | PN | FC | KN

Group 2 : WH | MB | MET | MW | BL | PA | NV | ANT | SR | BRM

MODEL - L/R HINGE UNIT COLOUR - HANDLE FINISH
Only indicate if different than chrome

Indicate basin hole drilling instructions separately

The **EXTRO** Vanity Range

The Extro features a soft close drawer system with finger pull, light grey interior, and a deep drawer. The frame and drawer can be the same finish, or different, your choice!

MEZZO

MADE IN CANADA

Extro Vanity

MODEL#	PRICE
EXTRO	
GROUP 1	**$625**
GROUP 2	**$725**

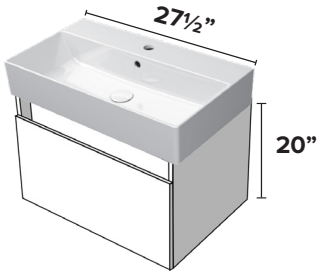

Basins Options:

1. GSI NORM 70x40
8637011 ✓
$630

2. GSI NUBES 70x40
9687011 ✓
$1275

1. GSI KUBE X 70x37
9455011
$810

Group 1 : WW | AH | SK | PN | FC | FA

Group 2 : WH | BL | MW | MB | WS | SR | CH | NV

MODEL - FRAME FINISH - DRAWER FINISH

Indicate basin hole drilling instructions separately

The ACCESSORIES

MEZZO

MADE IN CANADA

We offer a selection of accessories and storage solutions in an array of sizes and finishes to pair with your chosen vanity unit! With the purchase of each vanity in a special-order finish, 1 accessory is offered in the matching finish with no upgrade charge! Otherwise, pricing indicated is for Standard finishes, see page 15.

The ELITE, STELLA, AND NEW LIGHT LINEN CABINETS

TLINEL

GROUP 1	**$859**
GROUP 2	**$995**

Wall-Hung 2 door linen cabinet with open shelf & finger pull. 4 adjustable shelves, 1 fixed shelf. Soft close hinges.

TLINST

GROUP 1	**$925**
GROUP 2	**$1060**

Wall-Hung 2 door linen cabinet with open shelf & finger pull. 4 adjustable shelves, 1 fixed shelf. Soft close hinges with handles to match Stella series. Indicate finish choice and handle upgrade (if applicable).

TLINNL

GROUP 1	**$995**
GROUP 2	**$1130**

Wall-Hung 2 door linen cabinet with open shelf & finger pull. 4 adjustable shelves, 1 fixed shelf. Soft close hinges with handles to match New Light series.

The ELITE, STELLA, AND NEW LIGHT LINEN CABINETS

SLINEL-H (HORIZONTAL)
SLINEL-V (VERTICAL)

GROUP 1	**$550**
GROUP 2	**$625**

3 adjustable shelves. Hinged on left side . Soft close door with vertical door support to stay open for horizontal installation. Finger pull to match Elite & Aperto series.

SLINST-H (HORIZONTAL)
SLINST-V (VERTICAL)

GROUP 1	**$595**
GROUP 2	**$670**

3 adjustable shelves. Hinged on left side . Soft close door with vertical door support to stay open for horizontal installation. Handle to match Stella series with option to upgrade.

SLINNL-H (HORIZONTAL)
SLINNL-V (VERTICAL)

GROUP 1	**$625**
GROUP 2	**$700**

3 adjustable shelves. Hinged on left side . Soft close door with vertical door support to stay open for horizontal installation. Recessed chrome handle to match New Light series.

MEZZO

MADE IN CANADA

The MIRROR AND MEDICINE CABINET

ARMIR

GROUP 1	**$295**
GROUP 2	**$325**

Mirror made with same frame material as your chosen vanity. Grain of wood follows width of mirror. Can be mounted horizontally or vertically.

ARMED

GROUP 1	**$495**
GROUP 2	**$575**

Medicine cabinet made with same frame as your chosen vanity material. Left hand opening with 4 adjustable shelves. Reversible for left or right hand opening.

The VANITY LEGS

CATLEG

CHROME	**$195**
MATTE BLACK	**$250**
BRUSHED GOLD	**$250**

Set of four 5 1/2” steel legs for floor mounted vanities.

Group 1 : WW | AH | SK | PN | FC | FA

Group 2 : WH | BL | MW | MB | WS | SR | CH | NV

MODEL - UNIT FINISH - HANDLE FINISH
Only indicate if different than chrome

PROGETTO

OASIS30 IN CHIFFON SHOWN ABOVE

PROGETTO SERIES

Progetto is our most cost-effective vanity series, designed to offer modern style and functionality at an affordable price. Made in Canada with locally sourced materials, this collection prioritizes efficiency and durability while keeping costs low. By streamlining production and limiting the available finishes to a carefully pre-selected range, we minimize waste and optimize manufacturing, making Progetto an ideal choice for budget-conscious buyers. This series provides a stylish and economical solution without sacrificing quality.

A key factor in Progetto's affordability is the use of resin tops instead of traditional ceramic basins. Resin is a cost-effective, lightweight, and durable material that is easy to maintain, ensuring long-lasting performance. By pairing these practical tops with our pre-determined selection of finishes, we eliminate unnecessary production costs while still offering a clean, modern aesthetic. The result is a smart, functional vanity series that delivers both value and style, making Progetto the perfect balance of affordability and design.

MADE IN CANADA

OPTIONAL UPGRADES

The only optional modifications we offer, are changing the handles (and/or legs) from chrome to matte black (MB) or brushed gold (BG) at an additional cost as indicated.

In that case, be sure to follow ordering instructions, in order to code the product accordingly:

MODEL# FINISH - HANDLE

VIVIENNE36 FS $1095 → VIVIENNE36 FS-**MB** **$1195**

*Pricing needs to be updated as indicated per series.

STUDIO

STUDIO FS-BG

STUDIO is a space saving, mid-century modern vanity featuring a soft close door with a minimalist handle. Matched with an acrylic top, pre-drilled for a single hole basin.

Upgrade the feet and pull to Matte black or Brushed gold for $50 extra.

AVAILABLE FINISHES

FC	FS	DA
L583	L580	K24

PROGETTO

MADE IN CANADA

STUDIO FC $745

FIRST CLASS L583
MATCHED WITH CHROME HANDLE & FEET

MATTE BLACK (MB) & BRUSHED GOLD (BG)
HANDLES AVAILABLE FOR $50 EXTRA

STUDIO FS $745

FREE SPIRIT L580
MATCHED WITH CHROME HANDLE & FEET

MATTE BLACK (MB) & BRUSHED GOLD (BG)
HANDLES AVAILABLE FOR $50 EXTRA

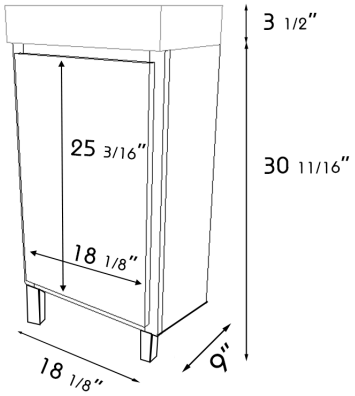

STUDIO DA $745

DALIA K24
MATCHED WITH CHROME HANDLE & FEET

MATTE BLACK (MB) & BRUSHED GOLD (BG)
HANDLES AVAILABLE FOR $50 EXTRA

1 WEEK SHIPPING!

MODEL# FINISH - HANDLE

CITY SCAPE

CITY SCAPE is a space saving, contemporary wall-hung vanity featuring a soft close door with finger C-channel aluminum pull. Matched with an acrylic top, pre-drilled for a single hole basin.

AVAILABLE FINISHES

L583 | L580 | K24

PROGETTO MADE IN CANADA

CITYSCAPE FC **$795**

FIRST CLASS L583

CITYSCAPE FS **$795**

FREE SPIRIT L580

CITYSCAPE DA **$795**

DALIA K24

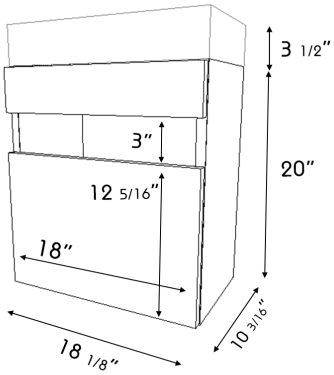

VIVIENNE

VIVIENNE is a contemporary wall-hung vanity offered in 3 different sizes, and in 3 distinct finishes. The 30” and 36” vanities feature 2 soft close drawers with a U-cutout in the top drawer. The 48” version has an additional 2 soft close doors on the sides. Matched with a thin 1” acrylic top, pre-drilled for a single hole basin.

Chrome handles are standard. Upgrade to matte black (MB) or brushed gold (BG) for $100 (VIVIENNE48 upgrade is $150).

AVAILABLE FINISHES

FC	FS	DA
L583	L580	K24

PROGETTO

MADE IN CANADA

VIVIENNE30 FC **$995**
FIRST CLASS L583

VIVIENNE30 FS **$995**
FREE SPIRIT L580

VIVIENNE30 DA **$995**
DALIA K24

MATTE BLACK (MB) & BRUSHED GOLD (BG) HANDLES AVAILABLE FOR $100 EXTRA

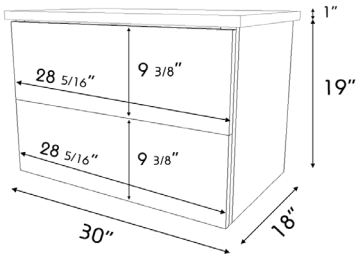

VIVIENNE36 FS **$1095**
FREE SPIRIT L580

VIVIENNE36 FC **$1095**
FIRST CLASS L583

VIVIENNE36 DA **$1095**
DALIA K24

MATTE BLACK (MB) & BRUSHED GOLD (BG) HANDLES AVAILABLE FOR $100 EXTRA

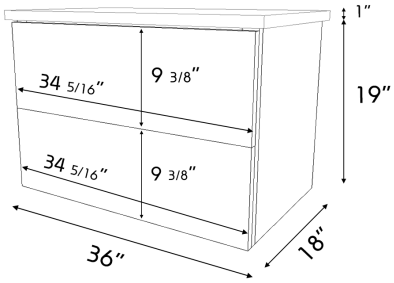

VIVIENNE48 DA **$1795**
DALIA K24

VIVIENNE48 FS **$1795**
FREE SPIRIT L580

VIVIENNE48 FC **$1795**
FIRST CLASS L583

MATTE BLACK (MB) & BRUSHED GOLD (BG) HANDLES AVAILABLE FOR $150 EXTRA

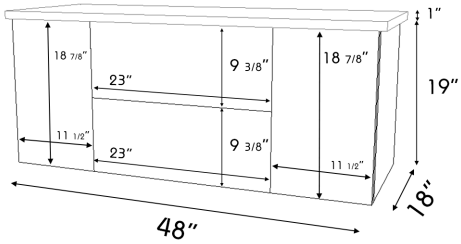

MODEL# FINISH - HANDLE

1 WEEK SHIPPING!

CANYON

CANYON is a contemporary vanity featuring 2 soft close doors with minimalist drawer pulls, as well as a deep bottom soft-close drawer. Matched with a 1¾" acrylic top, pre-drilled for a single hole basin.

AVAILABLE FINISHES

K48 K62

PROGETTO MADE IN CANADA

CANYON WS $1395

WHISKEY K48 WITH BLACK LEGS & HANDLES

CANYON FW $1295

FEATHER WHITE K62 WITH CHROME LEGS & HANDLES

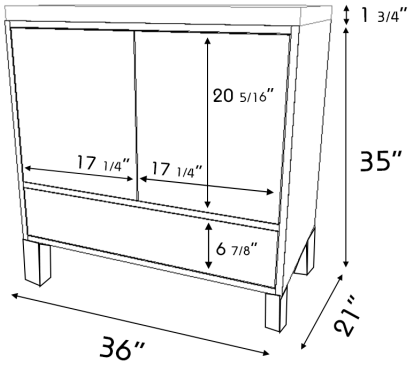

GABLE

GABLE42 SHOWN IN CALLA K87

GABLE is a Contemporary wall-hung vanity offered in 3 unique finishes with matte black handles. It features soft close drawers with a U-cutout in the top drawer. All are matched with a thick acrylic top, pre-drilled for a single hole basin.

Chrome handles are standard. Upgrade to matte black (MB) or brushed gold (BG) for $100.

AVAILABLE FINISHES

CA	RS	EC
K87	L831	L06

PROGETTO

MADE IN CANADA

GABLE30 EC **$1245**
ECRU OMNIA L06

GABLE30 CA **$1245**
CALLA K87

GABLE30 RS **$1245**
ROCK SOLID L831

MATTE BLACK (MB) & BRUSHED GOLD (BG) HANDLES AVAILABLE FOR $100 EXTRA

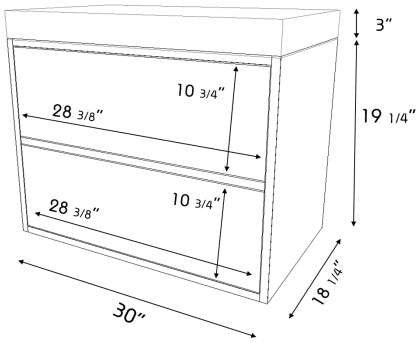

GABLE42 RS **$1425**
ROCK SOLID L831

GABLE42 CA **$1425**
CALLA K87

GABLE42 EC **$1425**
ECRU OMNIA L06

MATTE BLACK (MB) & BRUSHED GOLD (BG) HANDLES AVAILABLE FOR $100 EXTRA

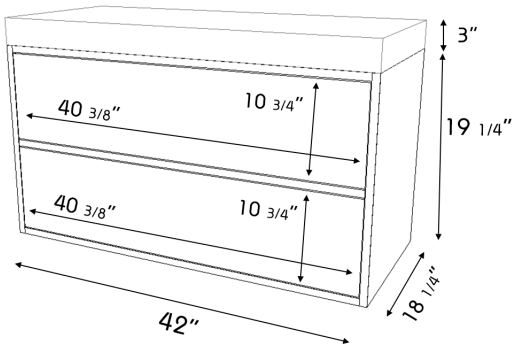

1 WEEK SHIPPING!

MODEL# FINISH - HANDLE

DUNE

DUNE is a contemporary vanity featuring 2 soft close, full depth drawers with an aluminum C channel, and a soft close door. Matched with a thin left hand bowl acrylic top, pre-drilled for a single hole basin.

AVAILABLE FINISHES

K60 | K24 | S663CA

PROGETTO

MADE IN CANADA

DUNE CH **$1295**

CHIFFON K60

DUNE DA **$1295**

DALIA K24

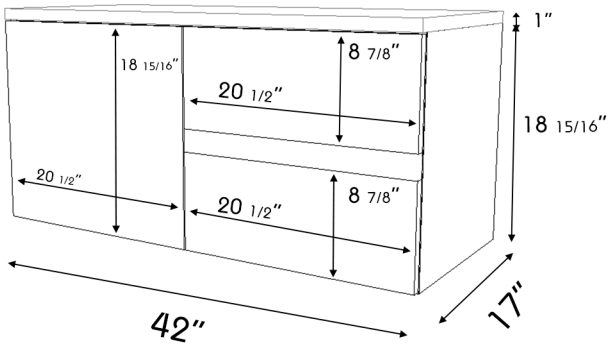

DUNE WW **$1295**

WOOD WHITE S663CA

OASIS

OASIS is a contemporary wall-hung vanity offered in 3 different sizes, and in 3 distinct finishes. The vanities feature an inset deep, soft close drawer with a U-cutout in the top interior drawer. Matched with a thin 1" acrylic top, pre-drilled for a single hole basin.

AVAILABLE FINISHES

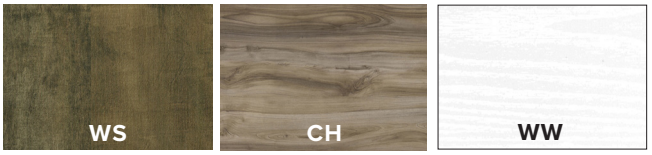

K48 | K60 | S663CA

PROGETTO

MADE IN CANADA

OASIS24 WS $1095
WHISKEY K48

OASIS24 CH $1095
CHIFFON K60

OASIS24 WW $1095
WOOD WHITE S663CA

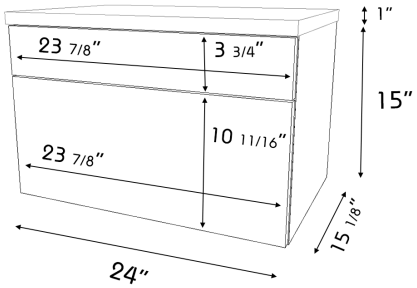

OASIS30 WW $1295
WOOD WHITE S663CA

OASIS30 CH $1295
CHIFFON K60

OASIS30 WS $1295
WHISKEY K48

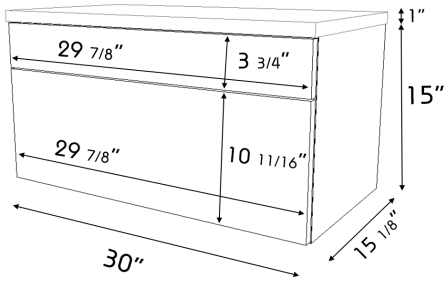

OASIS42 CH $1395
CHIFFON K60

OASIS42 WS $1395
WHISKEY K48

OASIS42 WW $1395
WOOD WHITE S663CA

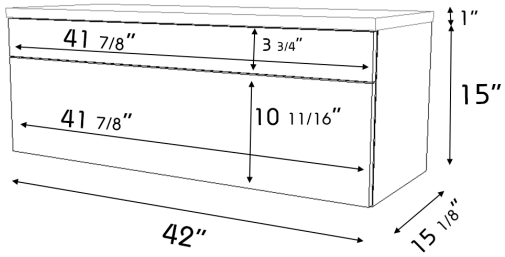

MODEL# FINISH - HANDLE

1 WEEK SHIPPING!

FLORENCE

FLORENCE is a transitional wall-hung vanity offered in 3 different sizes, and in 3 distinct finishes. The 30 & 36” vanities feature 2 soft close drawers with a U-cutout in the top drawer. The 48” version has 2 additional soft close doors on either side. All are matched with a thin 1” acrylic top, pre-drilled for a single hole basin.

Chrome handles are standard. Upgrade to matte black (MB) or brushed gold (BG) for $100 (FLORENCE48 upgrade is $150).

AVAILABLE FINISHES

WH	NV	BL
HG110	K45	631

PROGETTO

MADE IN CANADA

FLORENCE30 BL **$1295**
BLACK 631

FLORENCE30 WH **$1295**
GLOSSY WHITE HG110

FLORENCE30 NV **$1295**
WAVE BLUE K45

MATTE BLACK (MB) & BRUSHED GOLD (BG) HANDLES AVAILABLE FOR $100 EXTRA

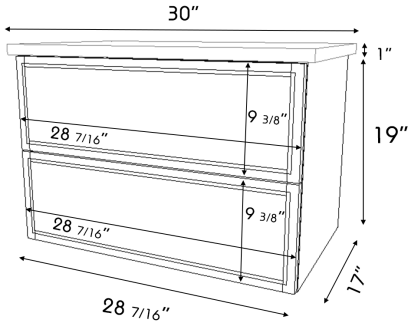

FLORENCE36 WH **$1450**
GLOSSY WHITE HG110

FLORENCE36 BL **$1450**
BLACK 631, MATTE BLACK HANDLES

FLORENCE36 NV **$1450**
WAVE BLUE K45

MATTE BLACK (MB) & BRUSHED GOLD (BG) HANDLES AVAILABLE FOR $100 EXTRA

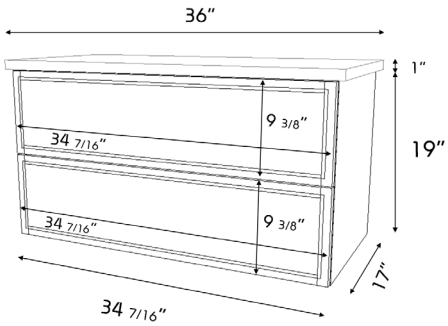

FLORENCE48 NV **$1750**
WAVE BLUE K45

FLORENCE48 WH **$1750**
GLOSSY WHITE HG110

FLOR4ENCE48 BL **$1750**
BLACK 631, MATTE BLACK HANDLES

MATTE BLACK (MB) & BRUSHED GOLD (BG) HANDLES AVAILABLE FOR $150 EXTRA

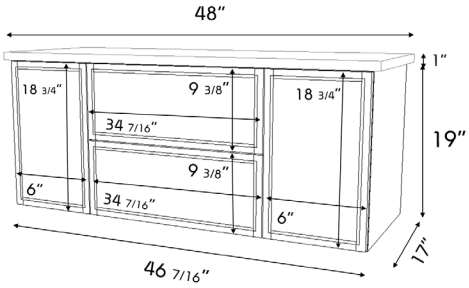

THE BOULEVARD

BOULEVARD48 BL-BG

THEBOULEVARD is a traditional freestanding vanity offered in 3 different sizes and compositions, as well as in 3 solid and timeless finishes. All feature soft close drawers and doors. All are matched with a 1¾" acrylic top, pre-drilled for a single hole basin.

Chrome handles are standard. Upgrade to matte black (MB) or brushed gold (BG) for $100 for 30"; $125 for 36"; $200 for 48".

AVAILABLE FINISHES

WH	NV	BL
HG110	K45	631

PROGETTO

MADE IN CANADA

BOULEVARD30 BL $1625
BLACK 631

BOULEVARD30 WH $1625
GLOSSY WHITE HG110

BOULEVARD30 NV $1625
WAVE BLUE K45

MATTE BLACK (MB) & BRUSHED GOLD (BG) HANDLES AVAILABLE FOR $100 EXTRA

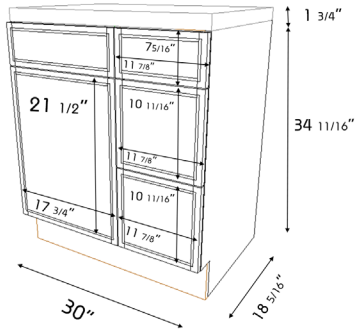

BOULEVARD36 WH $1825
GLOSSY WHITE HG110

BOULEVARD36 BL $1825
BLACK 631

BOULEVARD36 NV $1825
WAVE BLUE K45

MATTE BLACK (MB) & BRUSHED GOLD (BG) HANDLES AVAILABLE FOR $125 EXTRA

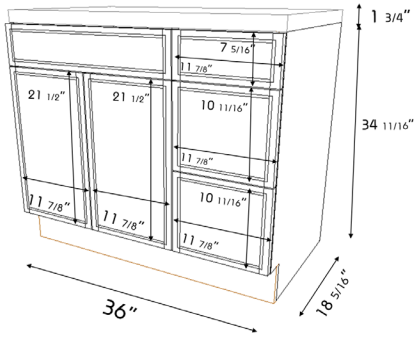

BOULEVARD48 NV $2595
WAVE BLUE K45

BOULEVARD48 WH $2595
GLOSSY WHITE HG110

BOULEVARD48 BL $2595
BLACK 631

MATTE BLACK (MB) & BRUSHED GOLD (BG) HANDLES AVAILABLE FOR $200 EXTRA

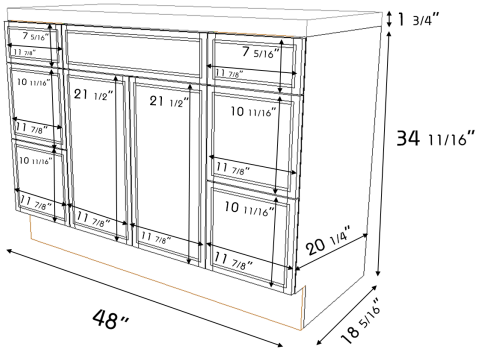

MODEL# FINISH - HANDLE

1 WEEK SHIPPING!

PRODUCT INSTRUCTIONS & WARRANTY DETAILS

CLEANING INSTRUCTIONS

Use a soft cotton cloth, moistened with water to clean doors and parts in matte finishes. For glossy finishes, a glass cleaner that does not contain solvents may also be used. Dry well afterwards with a soft cloth.
Do NOT use abrasive sponges, abrasive products, or products containing acids or solvents. No acetone, chlorine, wax, powder detergents should be used. Metallic parts such as handles or legs should only be cleaned with a moist cloth and dried with another soft cloth. No steel wool or abrasive sponges, abrasive products, products containing acids or solvents should be used.

WARRANTY

Aria will repair or replace, at it's option, free of charge within 5 (five) years of purchase date, any part which proves to be defective in material and/or workmanship under normal installation, use, service and maintenance. Aria is not liable due to unauthorized modifications or repairs, and surface deterioration due to cleaning methods not in accordance with instructions. This remedy is the sole and exclusive remedy of the purchaser for the breach of any warranties or negligence. Aria and Streamline Canada will not assume liability for labour expended, freight costs or damages accruing from the use of these products.

INSTALLATION

WARNING ALWAYS USE A PROFESSIONAL INSTALLER.

The washbasin must be fixed to the wall with suitable fixings before the vanity is installed.
Install washbasin according to manufacturer guidelines.

YOUTUBE

Removing & Replacing Drawers

Aria

VANITY COLLECTION VANITÉ

2025 PRICE LIST

CANADA

streamline CANADA
Designer Brands for Kitchen & Bath

ORDERS@STREAMLINECANADA.CA

U.S.A.

Aloré Design

ORDERDESK@ALOREDESIGN.COM

1-866-503-9796