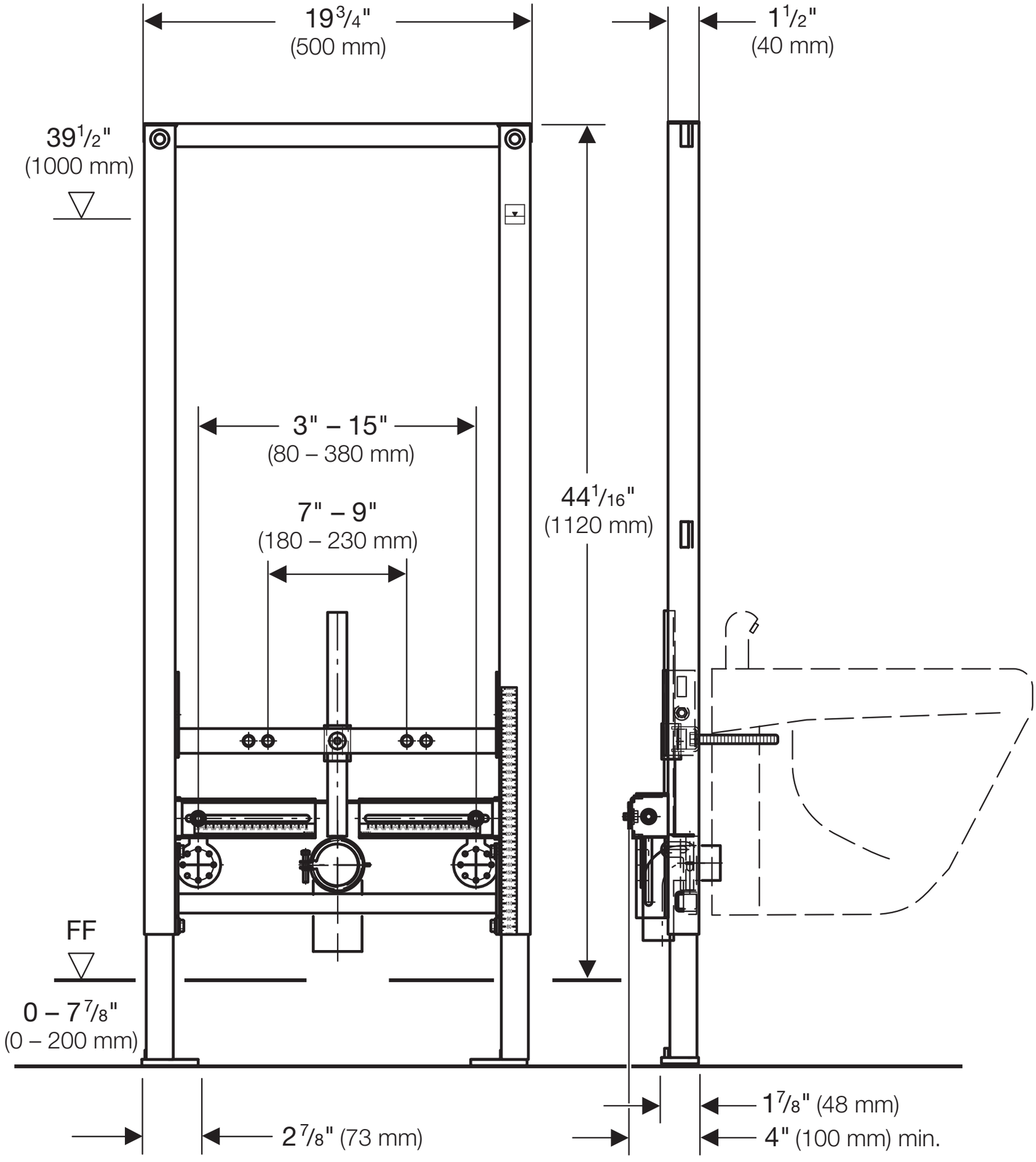
19 3/4"
(500 mm)
1 1/2"
(40 mm)
39 1/2"
(1000 mm)
3" – 15"
(80 – 380 mm)
7" – 9"
(180 – 230 mm)
44 1/16"
(1120 mm)
FF
0 – 7 7/8"
(0 – 200 mm)
2 7/8" (73 mm)
1 7/8" (48 mm)
4" (100 mm) min.