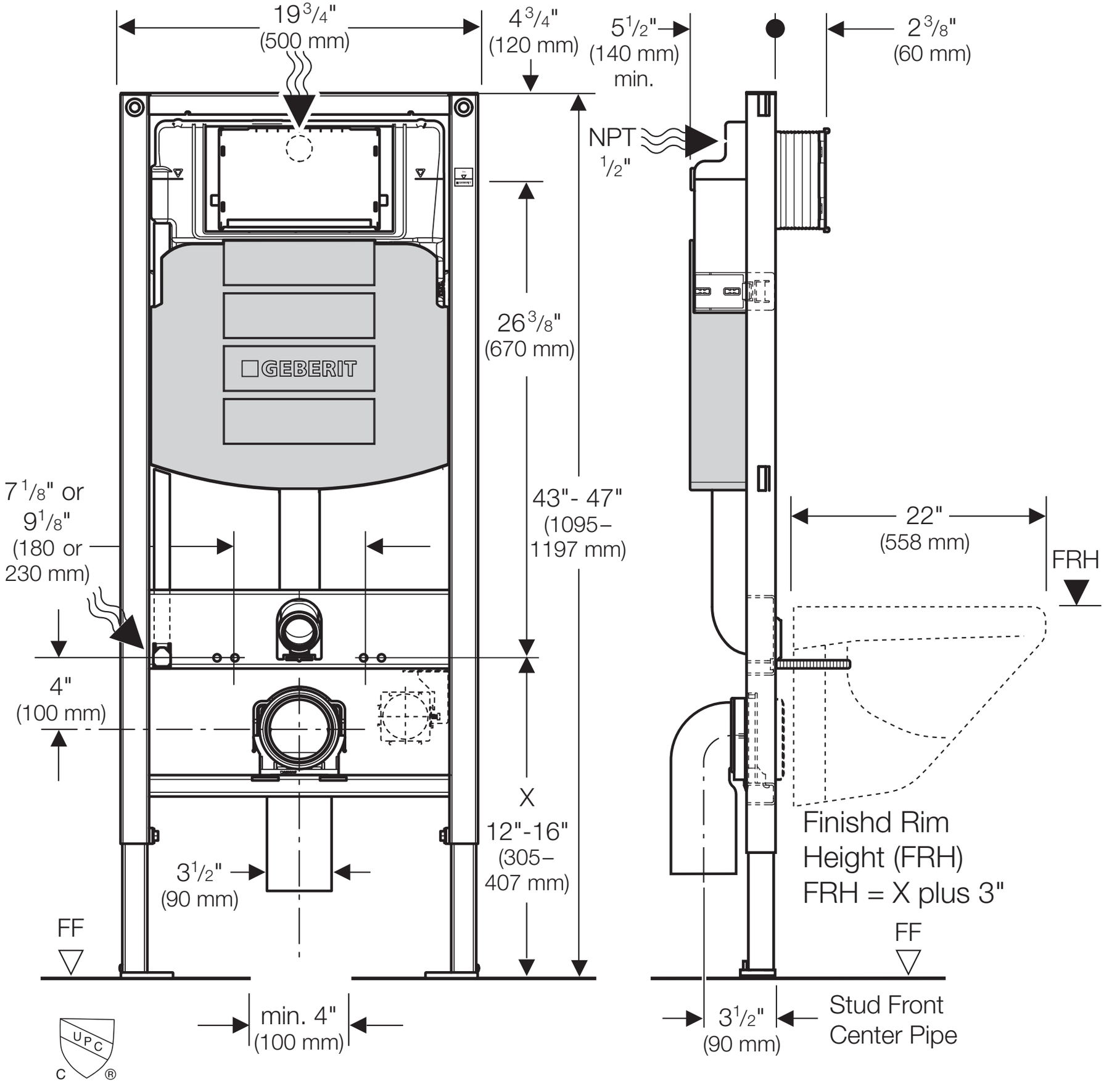
19 3/4"
(500 mm)
4 3/4"
(120 mm)
5 1/2"
(140 mm)
min.
2 3/8"
(60 mm)
NPT
1/2"
GEBERIT
26 3/8"
(670 mm)
43"- 47"
(1095–
1197 mm)
7 1/8" or
9 1/8"
(180 or
230 mm)
4"
(100 mm)
X
12"-16"
(305–
407 mm)
3 1/2"
(90 mm)
FF
min. 4"
(100 mm)
22"
(558 mm)
FRH
Finishd Rim
Height (FRH)
FRH = X plus 3"
FF
3 1/2"
(90 mm)
Stud Front
Center Pipe
UPC
C ®