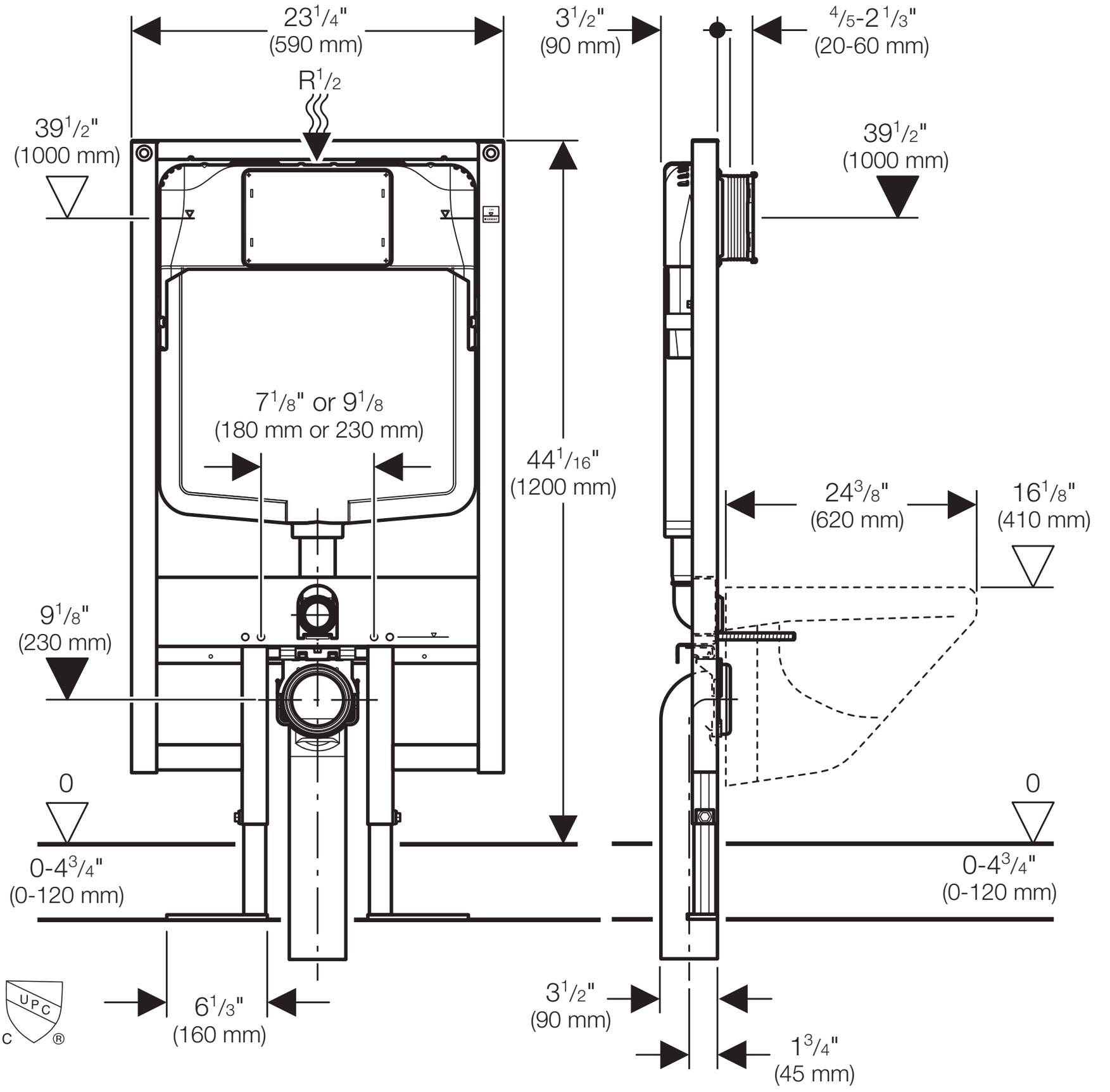
23 1/4"
(590 mm)
R 1/2
39 1/2"
(1000 mm)
7 1/8" or 9 1/8
(180 mm or 230 mm)
44 1/16"
(1200 mm)
9 1/8"
(230 mm)
0
0-4 3/4"
(0-120 mm)
6 1/3"
(160 mm)
3 1/2"
(90 mm)
4/5-2 1/3"
(20-60 mm)
39 1/2"
(1000 mm)
24 3/8"
(620 mm)
16 1/8"
(410 mm)
0
0-4 3/4"
(0-120 mm)
3 1/2"
(90 mm)
1 3/4"
(45 mm)
UPC
C ®