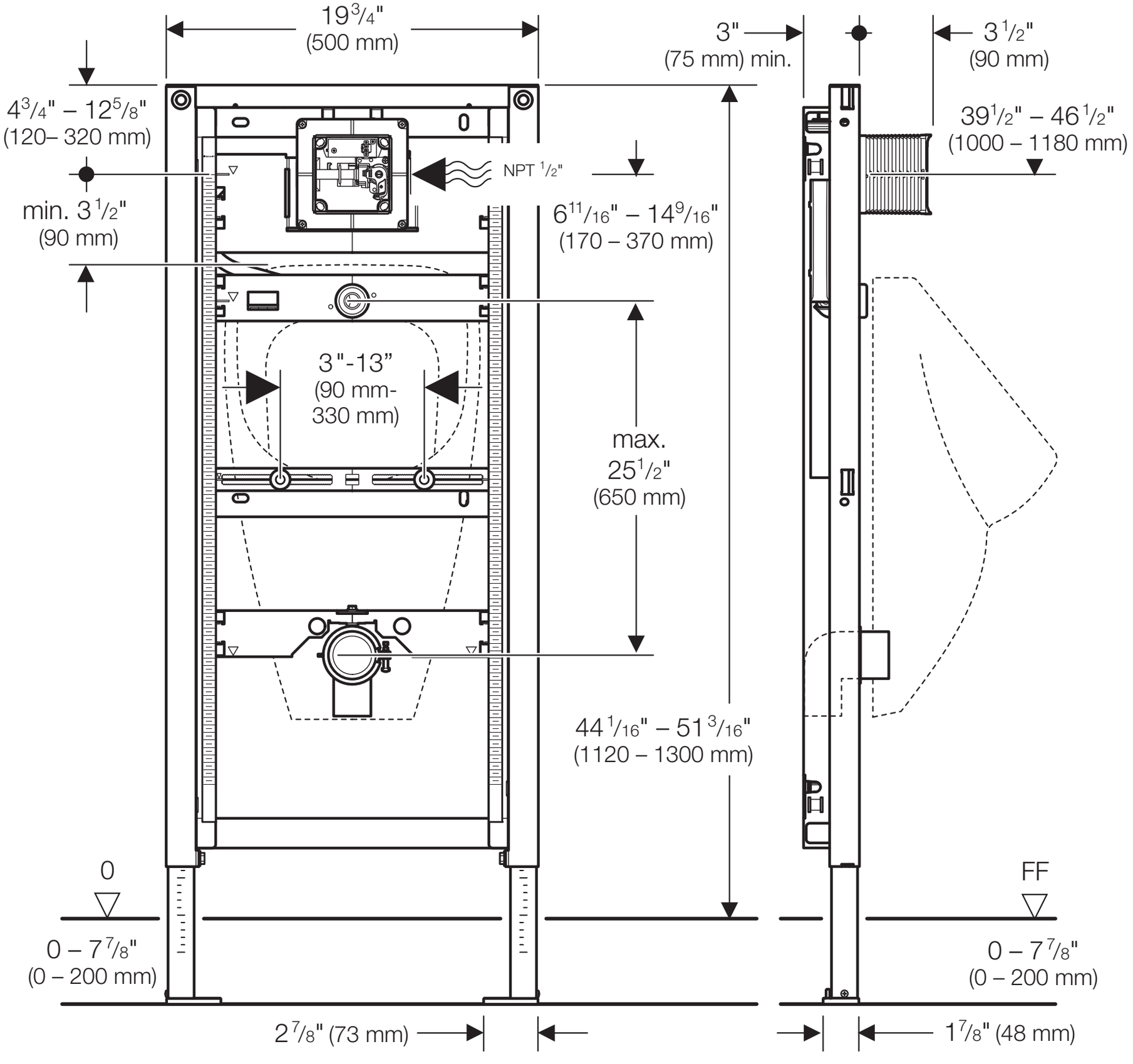

ASSE 1001 Certified Atmospheric Vacuum Breaker included.